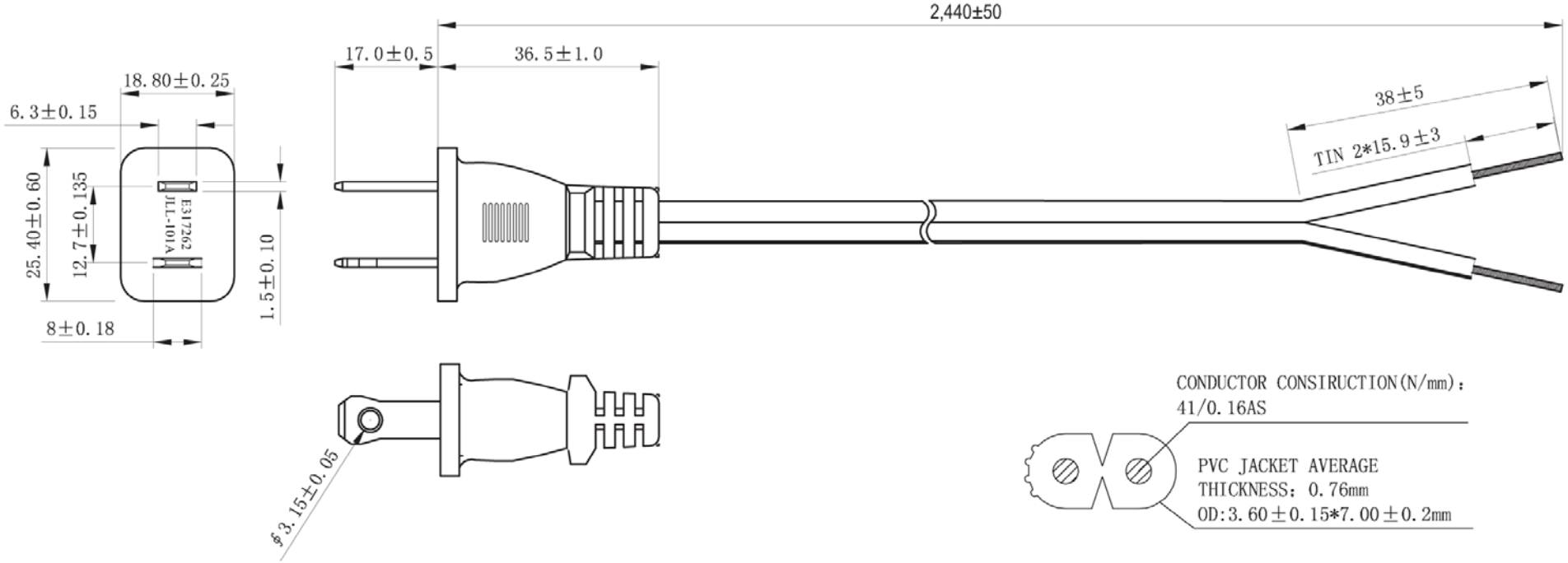

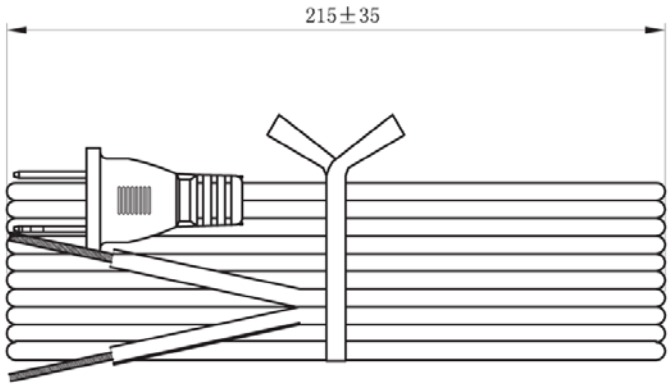

Material:

- E243711(UL) SPT-2 2 x 18AWG(0.824MM²)
  VW-1 60°C 300V
  - CSA 228191
- Jacket Color: Black

Electrical:

- 100% Open & Short Testing
- Insulation Resistance: 100MΩ (Min.)
- Voltage: 500V DC / 1 Min.

Unit: MM

RoHS Complaint

Scale	1:1						Name	Item No. AK500-OE-13-8F
TOLERANCE						Drawn	11.27.11	Chappell
X.X	±0.40					Approved		Title Power Cord - SPT-2/Open End, Polarized, Unshielded, 60°C, 8 Feet
X.XX	±0.25							
X.XXX	±0.15							Drawing No. rev00
Angle	±3°							
			Modification	Date	Name			Replace / Sheet

ASSMANN WSW components