PART No. MHKL3

for more information visit

www.hammondmfg.com

Data subject to change without notice

Isometric drawing Not to Scale

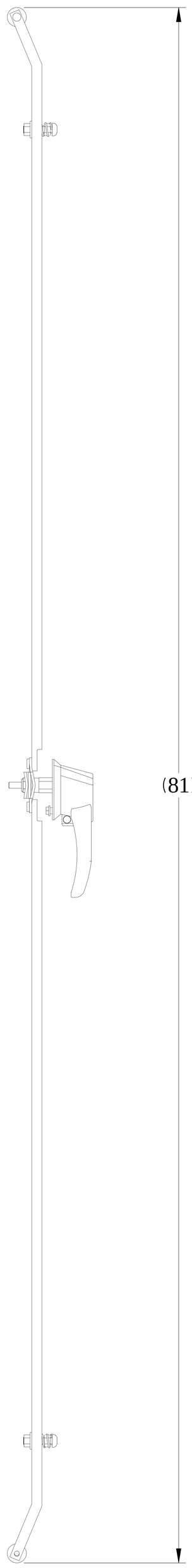

SIDE VIEW

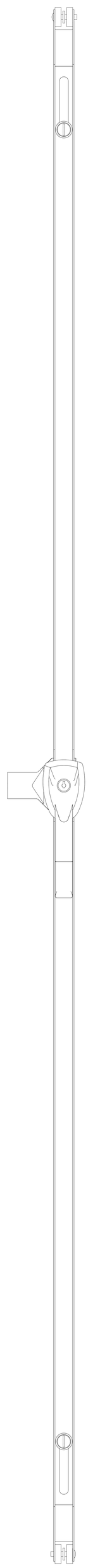

FRONT VIEW

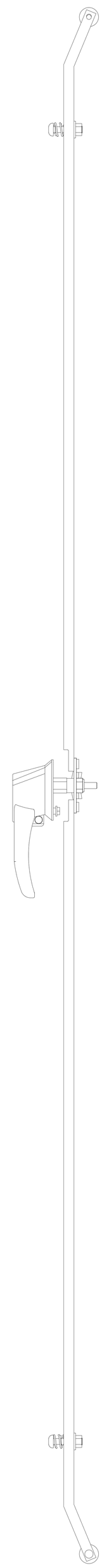

SIDE VIEW

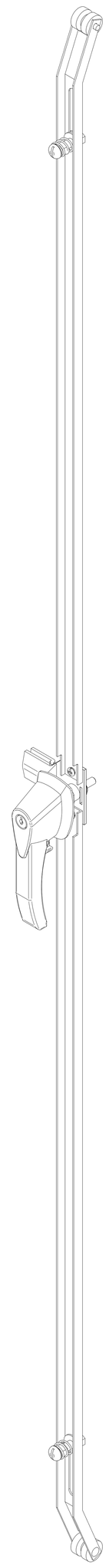

ISOMETRIC VIEW