THIS COPY IS PROVIDED ON A RESTRICTED BASIS AND IS NOT TO BE USED IN ANY WAY DETRIMENTAL TO THE INTERESTS OF PANDUIT CORP.

PANDUIT PART NUMBER	MILITARY PART NO. AND CLASS	STUD SIZE	DIMENSIONS in.				
			A ±.04 (1.02)	W ±.01 (.25)	C MIN	M ±.04 (1.02)	H ±.01 (.25)
PNF10-6R	MS25036-111 CLASS 1 & 2	#6	1.05 (26.57)	.38 (9.53)	.31 (7.85)	.86 (21.82)	.15 (3.73)
PNF10-8R	MS25036-156 CLASS 1 & 2	#8	1.05 (26.57)	.38 (9.53)	.31 (7.85)	.86 (21.82)	.17 (4.39)
PNF10-10R	MS25036-112 CLASS 1 & 2	#10	1.05 (26.57)	.38 (9.53)	.31 (7.85)	.86 (21.82)	.20 (5.03)
PNF10-14R	MS25036-157 CLASS 1 & 2	1/4"	1.19 (30.30)	.52 (13.30)	.38 (9.65)	.93 (23.70)	.27 (6.79)
PNF10-56R	MS25036-113 CLASS 1 & 2	5/16"	1.19 (30.30)	.52 (13.30)	.38 (9.65)	.93 (23.70)	.33 (8.39)
PNF10-38R	MS25036-114 CLASS 1 & 2	3/8"	1.27 (32.33)	.58 (14.73)	.43 (10.87)	.98 (24.97)	.39 (9.97)

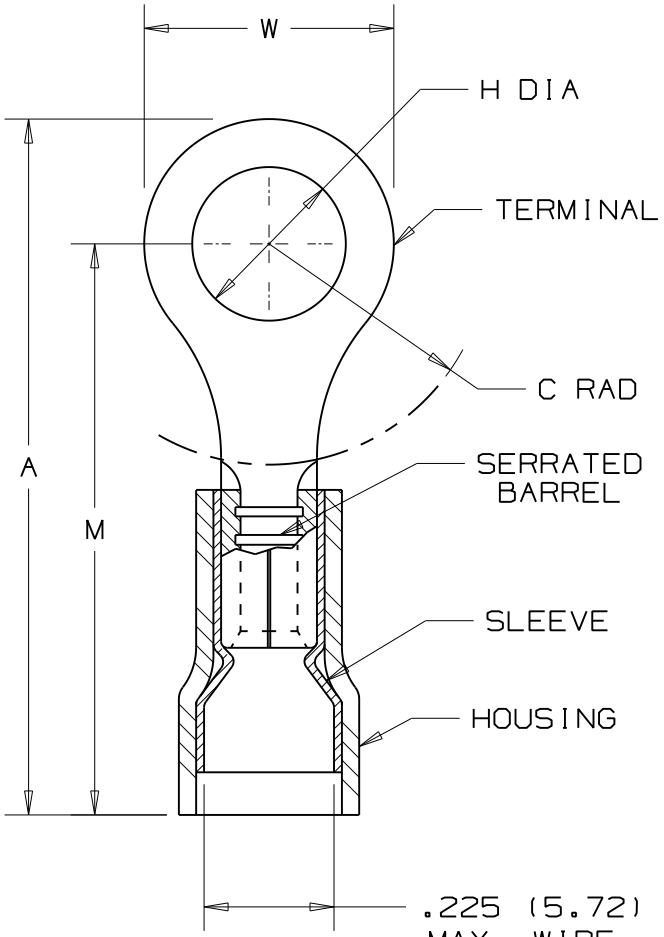

NOTES:

1) UL LISTED AND CSA CERTIFIED FOR:
   A. 600V. MAX. BLDG. WIRE (1000V. MAX. IN SIGNS, FIXTURES & LUMINARIES)
   B. 221°F. (105°C) MAX. TEMP. RATING
   C. #12-10 AWG SOLID OR STRANDED COPPER WIRE WITH THE CT-2500 INSTALLATION TOOL AND CT-2550CH CRIMP HEAD
   D. #12-10 AWG STRANDED AND #12 AWG SOLID COPPER WIRE WITH THE CT-1550 AND CT-1551 INST. TOOLS
   E. #12-10 AWG SOLID OR STRANDED COPPER WIRE WITH THE CT-100A INSTALLATION TOOL.
   F. MIL CLASS 2 WITH THE CT-460 INSTALLATION TOOL

2) MATERIAL:
   A. STAMPING- .04" (1.02) THK. COPPER, TIN PLATED
   B. HOUSING- NYLON, YELLOW
   C. SLEEVE- BRASS, TIN PLATED

3) WIRE STRIP LENGTH- 9/32" +1/32,-0 (7.1, +.8,-0)

4) SEE www.panduit.com FOR PART NUMBER SUFFIX DESIGNATION FOR PACKAGE SIZE.

5) DIMENSIONS IN PARENTHESIS ARE IN MILLIMETERS

LISTED 587H E52164

CERTIFIED LR31212

N41277BA/08

REV	DATE	BY	DESCRIPTION	CUST	PM
08	12/16/11	FS	Obsolete installation tools removed, UL information clarified, general dimensional updates.		
07	5/11	SRB	ADDED note #4		

PANDUIT CORP. TINLEY PARK, ILLINOIS

#12-10 NYLON INSULATED FUNNELED WIRE ENTRY RING TONGUE, .225 (5.72) MAX. WIRE INSULATION DIAMETER

DRAWN BY	CHK'D	SCALE	DRAWING NO.
DAW	RLS	NONE	A41277