Safety Liquid Leak Sensor
SQ4 SERIES

Related Information
■ General terms and conditions F-7
■ General precautions P.1501
■ Sensor selection guide ..... P.885~
■ Korea's S-mark P.1506

Control Category 4 PLe SIL3

panasonic.net/id/pidsx/global

Conforming to Machinery & EMC Directive

Certified

Certified by NRTL

Conforming to **SEMI-S2**

Certified

Two-stage detection × Safety certification

Improved productivity! Two-stage detection

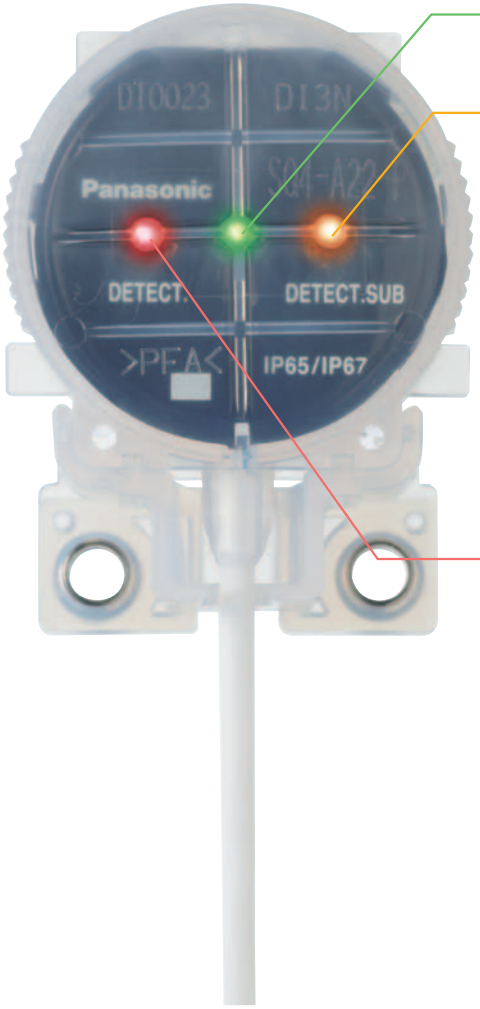

Lights up when conditions are normal (and at incipient liquid leak detection)

●Monitoring

Lights up at incipient liquid leak detection (and at abnormal leak detection)

●First stage:
Initial detection (non-safety output)

Use as a warning

Report the occurrence of an incipient liquid leak to the production supervisor and perform equipment maintenance after removing any work in progress.

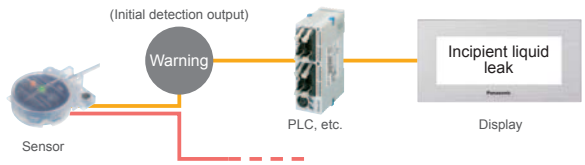

Ensure productivity	By quickly detecting even small liquid leaks (incipient leaks), personnel can perform preventive maintenance or plan maintenance, thereby reducing both downtime and damage to work in progress.

Lights up at abnormal liquid leak detection

●Second stage:
Liquid leak detection (safety-critical output)

Emergency stop

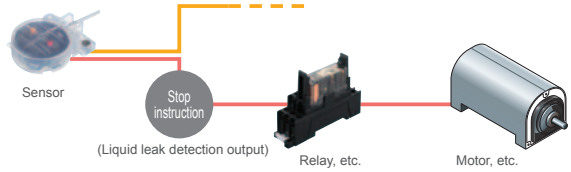

Ensure safety	In the event of a high-volume liquid leak (an abnormal liquid leak), the target equipment is stopped immediately to ensure safety.

FIBER SENSORS
LASER SENSORS
PHOTOELECTRIC SENSORS
MICRO PHOTOELECTRIC SENSORS
AREA SENSORS
LIGHT CURTAINS / SAFETY COMPONENTS
PRESSURE / FLOW SENSORS
INDUCTIVE PROXIMITY SENSORS
PARTICULAR USE SENSORS
SENSOR OPTIONS
SIMPLE WIRE-SAVING UNITS
WIRE-SAVING SYSTEMS
MEASUREMENT SENSORS
STATIC ELECTRICITY PREVENTION DEVICES
LASER MARKERS
PLC
HUMAN MACHINE INTERFACES
ENERGY CONSUMPTION VISUALIZATION COMPONENTS
FA COMPONENTS
MACHINE VISION SYSTEMS
UV CURING SYSTEMS
Selection Guide
Wafer Detection
Liquid Leak Detection
Liquid Level Detection
Water Detection
Color Mark Detection
Hot Melt Glue Detection
Ultrasonic
Small / Slim Object Detection
Obstacle Detection
Other Products
SQ4
EX-F70/ EX-F60

APPLICATIONS

Leak detection such as semi-conductive wafer wet etching process line

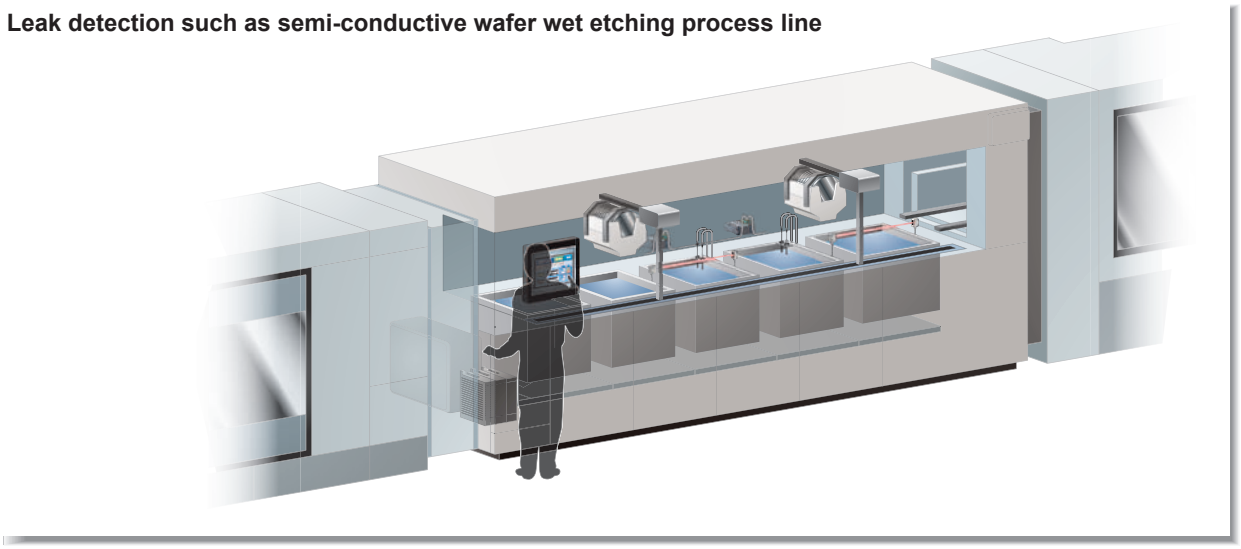

Two-stage detection addresses both incipient liquid leaks (by generating a warning) and abnormal liquid leaks (by initiating an emergency stop).

On the bottom of the sensor are two detection units, one located at the front and one at the center. If a liquid leak occurs in front of the sensor, the front detection unit will detect even a small incipient leak. When the leak increases in volume and reaches the center of the sensor, it will be detected as an abnormal leak. While previous implementations of two-stage liquid leak detection have relied on two separate sensors installed at different heights, the **SQ4** delivers the same full-featured detection capability in a single sensor unit.

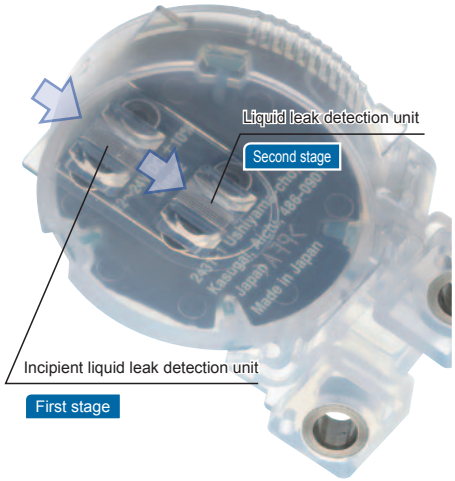

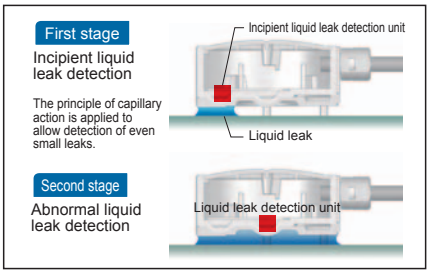

How it works

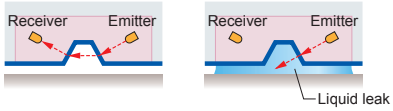

In the absence of a leak, the receiver is able to detect the light from the emitter. When a leak occurs, the light is diffused by the liquid.

The SQ4 can also detect human error (improper installation).

In addition to detecting liquid leaks, the **SQ4** can detect both human error (such as a failure to install the sensor) and sensor malfunctions. If the sensor itself or the sensor and its mounting bracket have become dislodged, have been improperly installed, or are suffering from a broken cable connection, light from the emitter will not reach the receiver, causing the device to generate the same output as if a liquid leak had occurred.

Knurling on the sides of the sensor head makes it easy to grip.

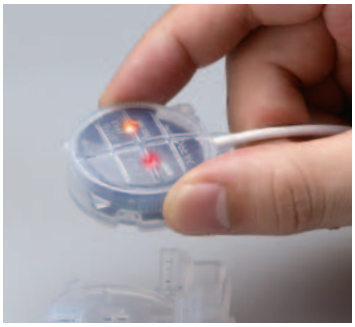

When conditions are normal
Sensor light from the emitter is able to reach the receiver.

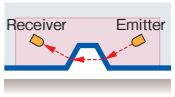

Light is refracted by the attachment and reaches the receiver.

When the sensor has been installed improperly

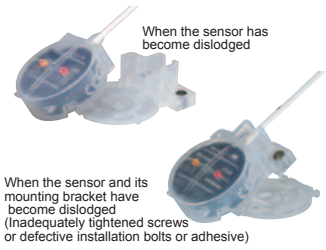

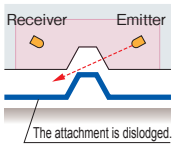

The attachment becomes separated from the mounting bracket, preventing light from reaching the receiver

The SQ4 can also be used alone.

The **SQ4** can also be used without a controller, allowing the benefits of two-stage detection to be added to existing equipment by augmenting or replacing existing detection systems.

FIBER SENSORS
LASER SENSORS
PHOTOELECTRIC SENSORS
MICRO PHOTOELECTRIC SENSORS
AREA SENSORS
LIGHT CURTAINS / SAFETY COMPONENTS
PRESSURE / FLOW SENSORS
INDUCTIVE PROXIMITY SENSORS
PARTICULAR USE SENSORS
SENSOR OPTIONS
SIMPLE WIRE-SAVING UNITS
WIRE-SAVING SYSTEMS
MEASUREMENT SENSORS
STATIC ELECTRICITY PREVENTION DEVICES
LASER MARKERS
PLC
HUMAN MACHINE INTERFACES
ENERGY CONSUMPTION VISUALIZATION COMPONENTS
FA COMPONENTS
MACHINE VISION SYSTEMS
UV CURING SYSTEMS
Selection Guide
Wafer Detection
Liquid Leak Detection
Liquid Level Detection
Water Detection
Color Mark Detection
Hot Melt Glue Detection
Ultrasonic
Small / Slim Object Detection
Obstacle Detection
Other Products
SQ4
EX-F70/ EX-F60

The SQ4 is the first device of its kind in the industry* to earn safety certification, demonstrating that it delivers safety performance of the highest caliber.

The **SQ4** system is designed to fulfill safety requirements imposed by international standards. When used in combination, the **SQ4-A** sensor and **SQ4-C11** controller meet category 4 / PLe / SIL3 requirements under ISO 13849-1:2006, which has been updated to add probability criteria to the existing risk evaluation system (in the control category), allowing the functional safety of programmable electronic control systems and related devices to be evaluated. The sensor fulfills control category 1 / PLc / SIL1 requirements when used in a standalone configuration.

*As of October 2010; according to research by Panasonic Industrial Devices SUNX.

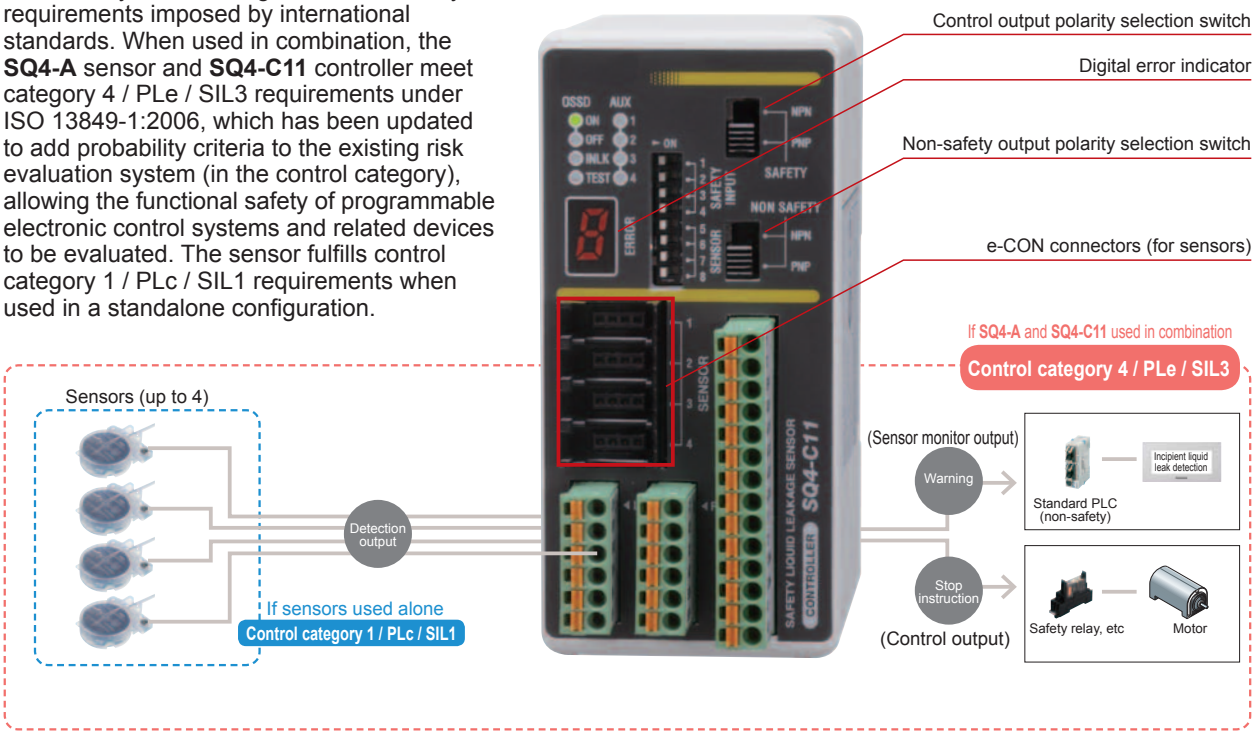

Dual CPUs deliver an advanced level of safety control.

The controller's two independent CPUs mutually check the unit's operating state, and redundant signal processing and output circuits ensure safety. Failure mode and effects analysis (FMEA)* further increases operational safety.

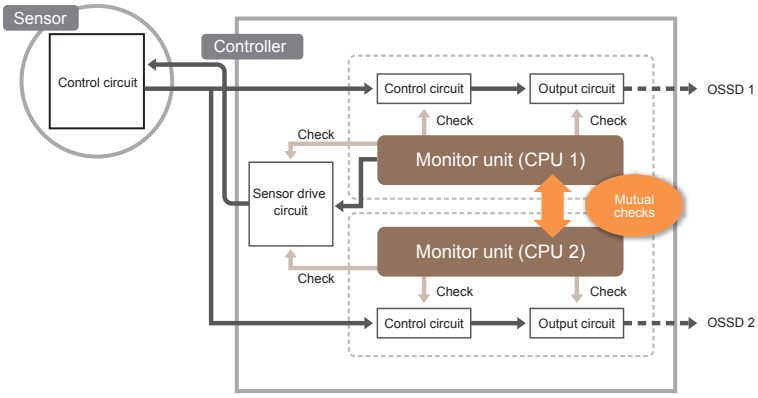

*FMEA comprises a systematic method for analyzing latent failures and defects so that they can be prevented from manifesting themselves.

ISO 13849-1: 2006

PLr (Required performance level)

Performance level (PL) applied in order to achieve the required risk reduction

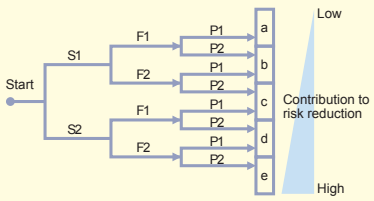

S: Severity of injury
- S1: Slight (normally reversible injury)
- S2: Serious (normally irreversible injury or death)

F: Frequency and/or exposure to hazard
- F1: Seldom to less often and/or the exposure time is short
- F2: Frequent to continuous and/or the exposure time is long

P: Possibility of avoiding hazard or limiting harm
- P1: Possible under specific conditions
- P2: Scarcely possible

Reduce wiring and lower costs by daisy-chaining controllers and other safety equipment.

The controller's safety input function can be used to connect wiring used to daisy-chain controllers together as well as input from safety contacts (2NC) on emergency stop switches, safety door switches, and other devices. In this way, safety output can be aggregated onto a single line to reduce safety circuit wiring and lower costs.

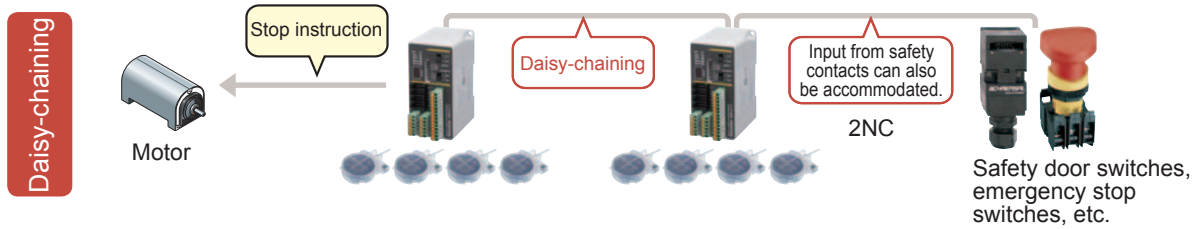

*Systems that connect two or more safety contacts on door switches or other devices fall under control category 3.
*The response times for all connected devices are added together to obtain the system response time.

PRODUCT CONFIGURATION

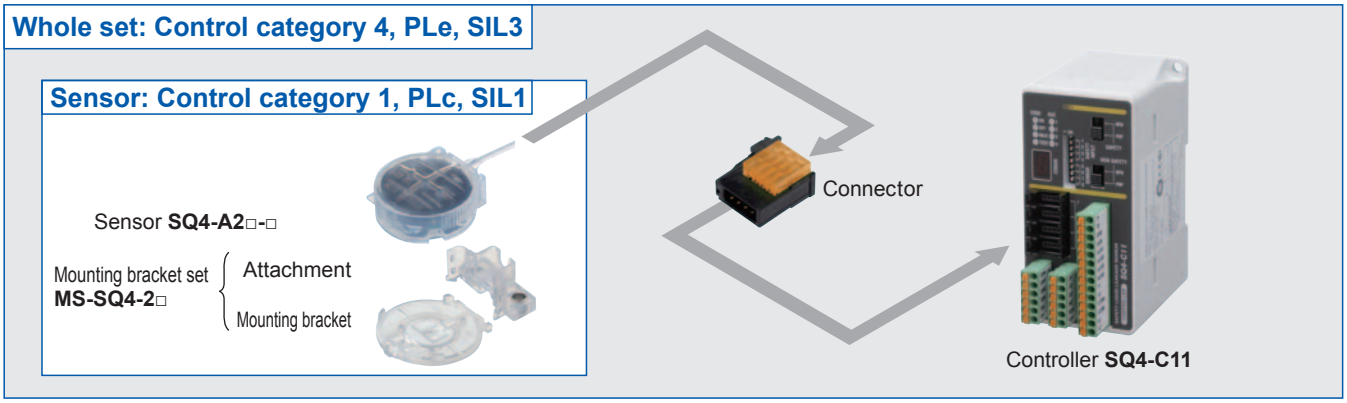

ORDER GUIDE

Sensors

Type	Appearance	Sensing object (Note 1)	Model No.	Output
For standard liquid	 Material: Polypropylene	Water etc.	**SQ4-A21-P**	PNP open-collector transistor
			SQ4-A21-N	NPN open-collector transistor
For chemical liquid	 Material: PFA	Sulfuric acid, Hydrochloric acid, Phosphoric acid, Ammonia, Fluorinert (Note 2), Galden (Note 2) or Fluorine etc.	**SQ4-A22-P**	PNP open-collector transistor
			SQ4-A22-N	NPN open-collector transistor

Notes: 1) The agents mentioned above are examples. It may not be detected depending on viscosity the agent. Before using this device, check the detecting liquid and installation condition.
2) Fluorinert™ is the world wide trademark of 3M. Galden is the world wide trademark of Solvay Solexis.

Mounting bracket set

Make sure to purchase the sensor and controller as a set.

Type	Appearance: Attachment	Appearance: Mounting bracket	Sensing object	Model No.
For standard liquid	 Material: Polypropylene	 Material: PVC	Water etc.	**MS-SQ4-21**
For chemical liquid	 Material: PFA	 Material: PFA	Liquids with comparatively high surface tension such as Sulfuric acid, Hydrochloric acid, Phosphoric acid, and Ammonia	**MS-SQ4-22**
		 Material: PVC	Liquids with comparatively low surface tension such as Fluorinert (Note), Galden (Note), and Hydrogen fluoride	**MS-SQ4-23**
			Liquids such as low-concentration hydrogen fluoride	**MS-SQ4-24**

Note: Fluorinert™ is the world wide trademark of 3M. Galden is the world wide trademark of Solvay Solexis.

Connectors

Make sure to purchase the connector when using the controller.

Designation	Model No.	Description
Hook-up connector (e-CON)	**CN-EP2**	For **SQ4-A21-□** (PVC cable) It is used to connect to the controller. Yellow 5 pcs. per set
	CN-EP3	For **SQ4-A22-□** (PFA cable) It is used to connect to the controller. Orange 5 pcs. per set

Hook-up connector

• **CN-EP2** • **CN-EP3**


Controller

Type	Appearance	Model No.	Description
Safety controller		**SQ4-C11**	Up to 4 safety liquid leak sensors can be connected. Control Category 4, Ple SIL3

SPECIFICATION

Sensors

Item \ Type	For standard liquid	For chemical liquid
Model. No. PNP output	**SQ4-A21-P**	**SQ4-A22-P**
Model. No. NPN output	**SQ4-A21-N**	**SQ4-A22-N**
Sensing object	Water (Standard liquid) (Note 2)	Sulfuric acid, Hydrochloric acid,Phosphoric acid, Ammonia, Fluorinert (Note 3), Galden (Note 3), Hydrofluoric acid etc. (Note 2)
Supply voltage	12 to 24 V DC ±10 % Ripple P-P 10 % or less	
Current consumption	30 mA or less	
Utilization category	DC-12, DC-13	
Leakage detection output (Abnormal leakage detection, Safety output)	<PNP output type> PNP open-collector transistor • Maximum source current: 50 mA • Applied voltage: Same as the supply voltage (between detection output and +V) • Residual voltage: 2.5 V or less (at 50 mA source current)	<NPN output type> NPN open-collector transistor • Maximum sink current: 50 mA • Applied voltage: Same as the supply voltage (between detection output and 0 V) • Residual voltage: 2 V or less (at 50 mA sink current)
Response time	10 ms or less	
Output operation	ON when initial detection, OFF when detection leakage or wrong installation	
Initial leakage detection output (Initial leakage, Non-safety output)	<PNP output type> PNP open-collector transistor • Maximum source current: 50 mA • Applied voltage: Same as the supply voltage (between detection auxiliary output and +V) • Residual voltage: 2.5 V or less (at 50 mA source current)	<NPN output type> NPN open-collector transistor • Maximum sink current: 50 mA • Applied voltage: Same as the supply voltage (between detection auxiliary output and 0 V) • Residual voltage: 2 V or less (at 50 mA sink current)
Response time	50 ms or less	
Output operation	ON when normal condition, OFF when initial detection or accidental leakage	
Protection	IP65 / IP67 (IEC)	
Ambient temperature	–10 to +55 °C +14 to +131 °F (No dew condensation or icing allowed) (Note 4), Storage: –10 to +55 °C +14 to +131 °F	
Ambient humidity	35 to 85 % RH, Storage: 35 to 85 % RH	
Emitting element	Infrared LED (modulated)	
Material	Enclosure: Polypropylene	Enclosure: PFA
Cable	0.18 mm^2 4-core PVC cabtire cable, 2 m 6.562 ft long	0.1 mm^2 4-core PFA cabtyre cable, 2 m 6.562 ft long
Weight	Net weight: 45 g approx., Gross weight: 110 g approx.	

Notes: 1) Where measurement conditions have not been specified precisely, the conditions used were an ambient temperature of +20 °C +68 °F.
2) The agents mentioned above are examples. It may not be detected depending on viscosity the agent.
Before using this device, check the detecting liquid and installation condition.
3) Fluorinert™ is the world wide trademark of 3M. Galden is the world wide trademark of Solvay Solexis.
4) Liquid being detected should be also kept within the rated ambient temperature range.

SPECIFICATION

Controller

Item \ Model No.		SQ4-C11
Applicable standards	International standard	ISO 13849-1 (Category 4, PLe), IEC 61508-1 to 7 (SIL3)
	Japan	JIS B 9705-1 (Category 4), JIS C 0508-1 to 7 (SIL3)
	Europe (EU) (Note 2)	EN 55011 Class A, EN 61000-6-2, EN 50178, EN ISO 13849-1 (Category 4, PLe), EN 61508-1 to 7 (SIL3)
	North America (Note 3)	ANSI/UL 508, CAN/CSA C22.2 No.14
	South Korea	S1-G-1-2009, S2-W-5-2009
	SEMI	Conforming to SEMI-S2-0310a
Power voltage		24 V DC$^{+10}_{-15}$ % Ripple P-P 10 % or less
Consumption current		200 mA or less
Control output [OSSD 1 (Y1), OSSD 2 (Y2)]		PNP open-collector transistor / NPN open-collector transistor (switch method) <Selecting PNP output> • Maximum source current: 200 mA • Applied voltage: Same as power voltage (between control output to +V) • Residual voltage: 2.5 V or less (at 200 mA source current) <Selecting NPN output> • Maximum sink current: 200 mA • Applied voltage: Same as power voltage (between control output to 0 V) • Residual voltage: 2.0 V or less (at 200 mA sink current)
	Response time	20 ms or less (excluding the response time of the sensor)
	Operation mode (Output operation)	ON when inntial detection, OFF when detection leakage or wrong installation
	Utilization category	DC-12, DC-13
Sensor monitor output (AUX1, 2, 3, 4, Non-safety output)		PNP open-collector transistor / NPN open-collector transistor (switch method) <Selecting PNP output> • Maximum source current: 60 mA • Applied voltage: Same as power voltage (between sensor monitor output to +V) • Residual voltage: 2.5 V or less (at 60 mA source current) <Selecting NPN output> • Maximum sink current: 60 m A • Applied voltage: Same as power voltage (between sensor monitor output to 0 V) • Residual voltage: 2.0 V or less (at 60 mA sink current)
	Response time	100 ms or less (excluding the response time of the sensor)
	Operation mode (Output operation)	ON when normal condition, OFF when initial detection or accidental leakage
	Utilization category	DC-12, DC-13
Lockout output		OFF for lockout (Rating: Same as sensor monitor output)
Auxiliary output		Negative logic output of control output 1 / 2 (OSSD 1 / 2) (Rating: Same as sensor monitor output) [Auxiliary output ON when control output 1 / 2 (OSSD 1/2) is OFF]
Functions		Interlock / lockout cancel / Test input / External device monitor / Safety input / Control output polarity selection / Non-safety output polarity selection / Sensor connection number setting
Protection		IP20 (IEC) (However, it should be in IP54 protection structure of control panel)
Ambient temperature		–10 to +55 °C +14 to +131 °F (No dew condensation or icing allowed), Storage: –10 to +55 °C +14 to +131 °F
Ambient humidity		35 to 85 % RH, Storage: 35 to 85 % RH
PFHD		2.55 × 10^{-9} (when connecting 4 safety liquid connecting sensors)
MTTFd		100 years or more
Material		Main unit case: PC / ABS (alloy)
Weight		Net weight: 170 g approx., Gross weight: 440 g approx.

Notes: 1) Where measurement conditions have not been specified precisely, the conditions used were an ambient temperature of +20 °C +68 °F.
2) Regarding EU Machinery Directive, a Notified Body, TÜV SÜD, has certified with the type examination certificate.
3) With regards to the standards in the US, under the US regulation 29 CFR 1910.7, TÜV SÜD, a Nationally Recognized Testing Laboratory (NRTL) certified by OSHA, has certified with the safety certificate based on UL / ANSI standards.
With regards to the standards in Canada, under the safety regulations based on CEC (Canadian Electric Code), TÜV SÜD, a Certification Body accredited by SCC, has certified with the safety certificate based on CSA standards.

I/O CIRCUIT AND WIRING DIAGRAMS

Sensors

SQ4-A□-P — PNP output type

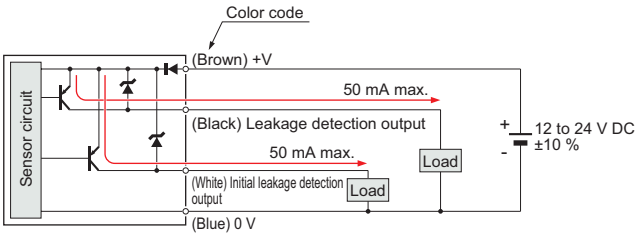

SQ4-A□-N — NPN output type

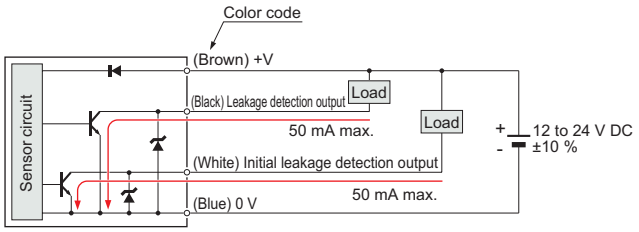

Controller

SQ4-C11 — Controller

For operation with PNP output

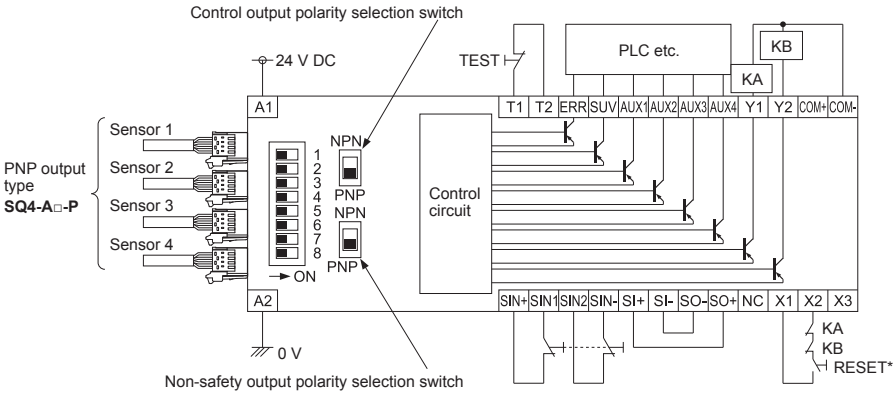

KA, KB: External devices

(Forced guide relay, magnet contactor or monitored valve)

*RESET

Manual / Auto reset can be selected by the wiring of the reset input terminals (X1, X2, and X3).

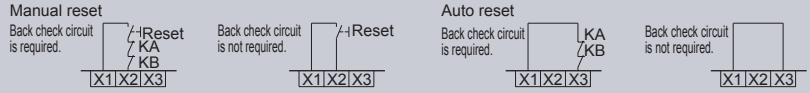

For operation with NPN output

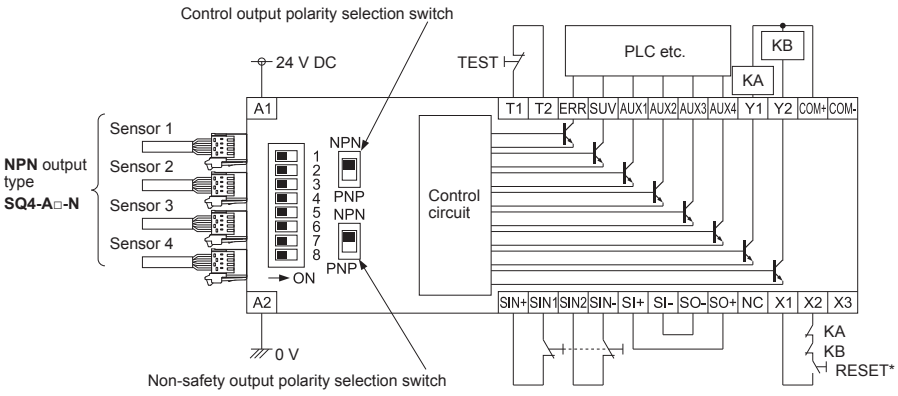

KA, KB: External devices

(Forced guide relay, magnet contactor or monitored valve)

*RESET

Manual / Auto reset can be selected by the wiring of the reset input terminals (X1, X2, and X3).

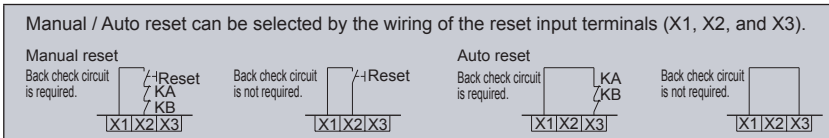

PRECAUTIONS FOR PROPER USE

Refer to p.1501 for general precautions.

- This product is a sensor for detecting leak of fluids.
- When this product is used with safety devices, construct the system such that the device itself.

- Before using this device, check whether the device performs properly with the functions and capabilities as per the design specifications.
- Avoid using this device in an explosive atmosphere because this product does not have an explosive-proof protective construction.

Installation

- There is the detection mount difference by directivity of a liquid leakage. When there are a direction from which a liquid leakage happens, and an inclination, please install the nose-of-cam side (opposite side of a cable) of a sensor towards a top.
- Use the mounting bracket **MS-SQ4-□** (optional) which suits the liquid to detect.
- Periodical checking of operation is recommended with the liquids which are not dangerous (water, alcohol, etc.).
- The amount of detection may change with the conditions of the installation surface.
- Be sure to use the mounting bracket **MS-SQ4-□** (optional) when installing this device to avoid human error, etc. Reliable detection cannot be guaranteed when this sensor is used alone.

Leakage detection condition and variation factor

- Leak detection part of this product properly detects the leakage in the following condition.
  1. Detection range: Area except backward of this product (liquid must enter to the detection range)
  2. Material of installation surface: Hard vinyl chloride or Stainless steel
  3. Surface condition for installation: Glossy surface (surface roughness: corresponding 0.4 μmRa) and clean surface.
  4. Installation surface angle: Horizontal

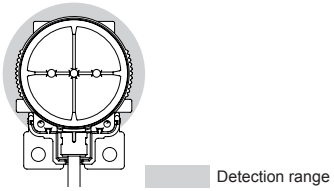

- This product may not detect properly liquid in following element.
  1. Liquid kind, consistency (surface tension) and air bubble incorporation.
  2. Material, roughness, angle, dirtiness and liquid absorption of surface of installed surface of sensor.
  3. Wrong selection of dedicated mounting bracket.
- Check the detecting liquid and the installation condition before use.

DIMENSIONS (Unit: mm in)

The CAD data in the dimensions can be downloaded from our website.

SQ4-A21-□ Sensor

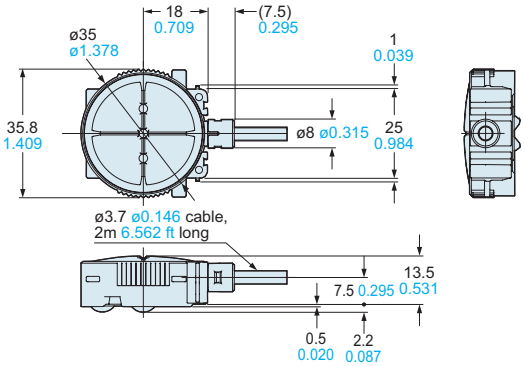

SQ4-A22-□ Sensor

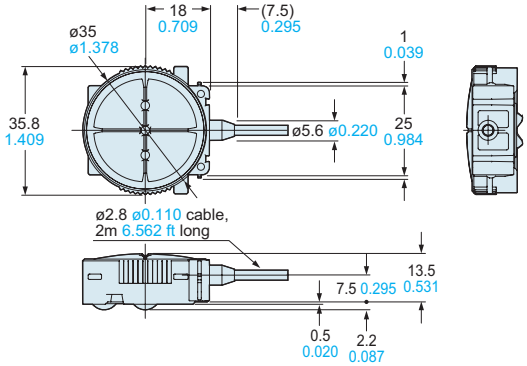

Assembly dimensions with mounting bracket for MS-SQ4-21

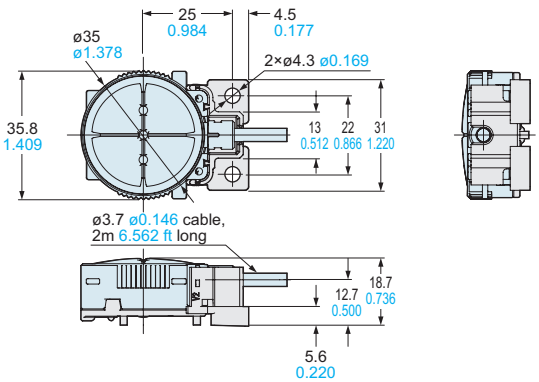

Assembly dimensions with mounting bracket

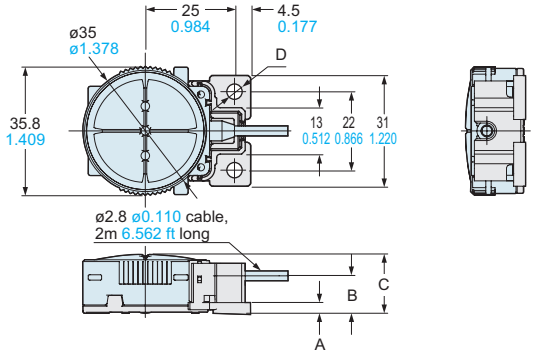

Mounting bracket set model No.	A	B	C	D
MS-SQ4-22	5.4 0.213	12.7 0.500	18.7 0.736	2×ø4.2 ø0.165
MS-SQ4-23	3.4 0.134	10.5 0.413	16.5 0.650	2×ø4.3 ø0.169
MS-SQ4-24	5.6 0.220	12.7 0.500	18.7 0.736	2×ø4.3 ø0.169

MS-SQ4-□ Mounting bracket set

Attachment

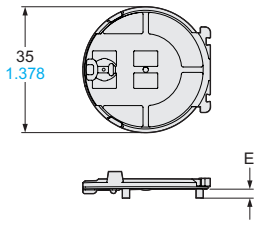

PVC mounting bracket

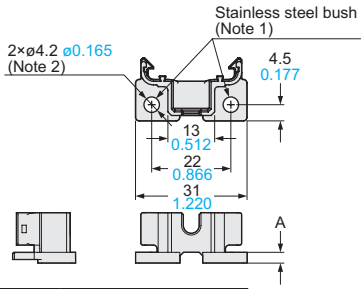

Model No.	A	E
MS-SQ4-21	5.6 0.220	2.5 0.098
MS-SQ4-22	5.4 0.213	2.5 0.098
MS-SQ4-23	3.4 0.134	0.3 0.012
MS-SQ4-24	5.6 0.220	2.5 0.098

Notes: 1) Drawing above is for PFA mounting bracket.
PVC mounting brackets do not incorporate stainless steel bushes.
2) The size of mounting holes is ø4.3 mm ø0.169 in

SQ4-C11 Controller