Head-separated Dual Display Digital Pressure Sensor For Gas

DPC-100 SERIES DPH-100 SERIES

Related Information
■ General terms and conditions..... F-7
■ Glossary of terms..... P.1469~
■ Sensor selection guide ..... P.731~
■ General precautions P.1472

Conforming to EMC Directive

Recognition

* Passed the UL 991 Environment Test

* UL 61010C-1 compatible, Passed the UL 991 Environment Test based on SEMI S2-0200. [Category applicable for semiconductor manufacturing: TWW2, Process Equipment] [Applicable standards: UL 61010C-1] [Additional test / evaluation standards as per intended use: UL 991, SEMI S2-0200]

Digital | Auto reference | With analog output

Single axis type
Direct installation using a hexagonal wrench

Breakthrough construction

Obstructions can be avoided and installation from above can be done much more easily using a hexagonal wrench. This also eliminates wasted installation space and contributes to a smaller installation footprint.

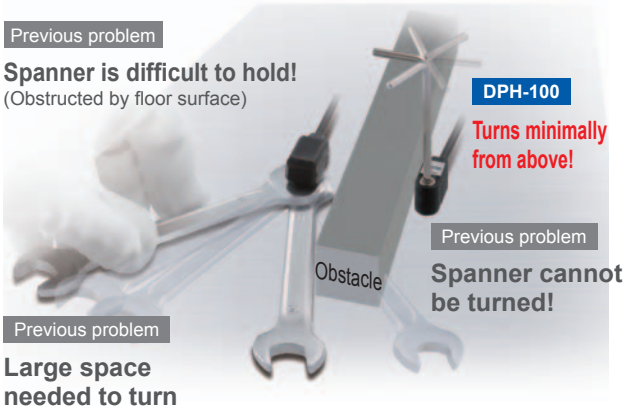

Flexible design! Sensor heads can be embedded New concept

Because the bolts can be turned from directly above, embedding the sensor heads into narrow spaces is possible. In addition, the flat installation leaves no worries for danger of objects striking against the sensor and damaging it.

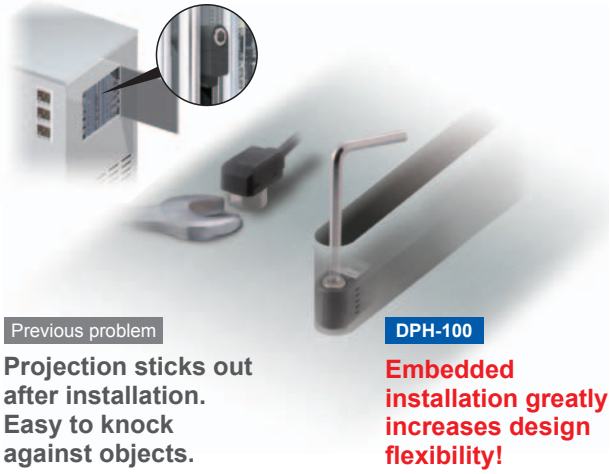

Quick maintenance

During maintenance, the sensor head needed to be removed can be easily removed from directly above.

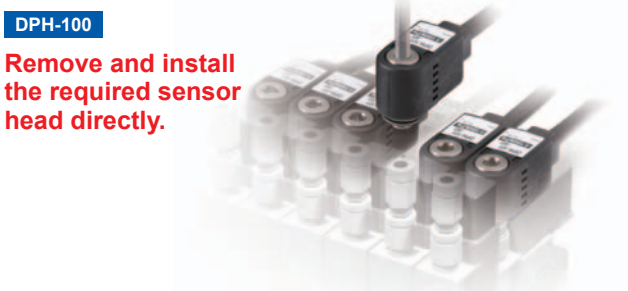

To remove ③, you have to remove the sensors in order starting from ①.

APPLICATIONS

Confirming vacuum breakdown

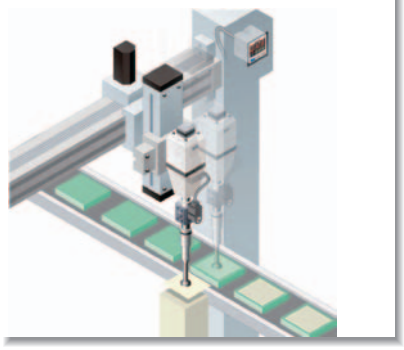

Confirming reference pressure

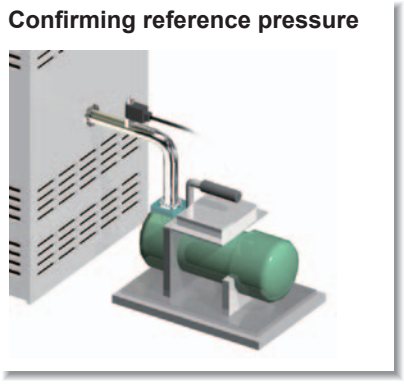

Air-leak test

Mounting space-saving

Space saving during installation

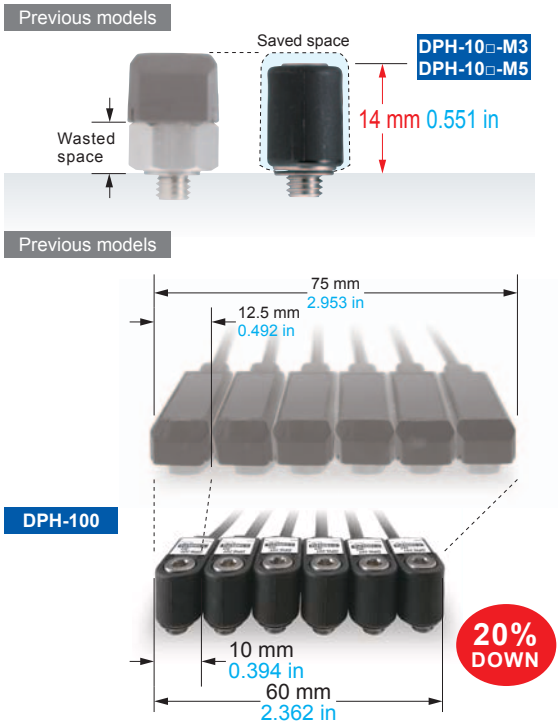

Because the dead zone caused by the nut is eliminated, the narrowed-down thickness after installation contributes to space saving.

Easy adjustment

Sensor heads can be turned after installation

After installation, you can alter the cable direction with the pressure port still secured in place. In addition, the cable does not get twisted during installation.

Independent use of sensor head possible

Separate analog voltage output for each sensor head

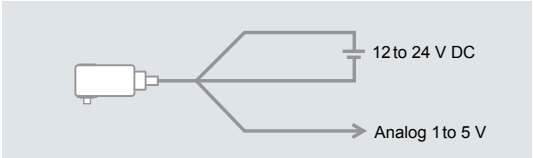

The analog voltage output from the sensor head can be picked up directly.

Sensor head line-up

3 types of pressure range

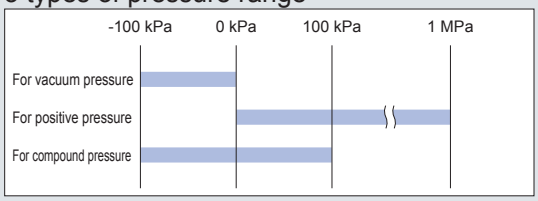

Stainless steel pressure ports come in 3 shapes

Dual display + Direct setting

Equipped with a 30 mm 1.181 in square compact-sized dual display.
"Current value" and "Threshold value" can be checked at the same time.
The threshold value can be changed in RUN mode directly.

The current value and the threshold value can be checked simultaneously!

Because direct setting is possible

Operation is as easy as analog

Previous problem Difficulty with only one display

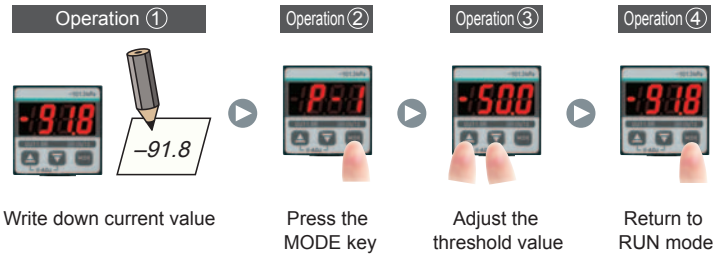

Dual display direct setting

Just press the button while in RUN mode

1/4 of the operations

High-speed response time at 500 µs

Reduced tact time. Response time contributes to even greater productivity.

Response time at 500 µs

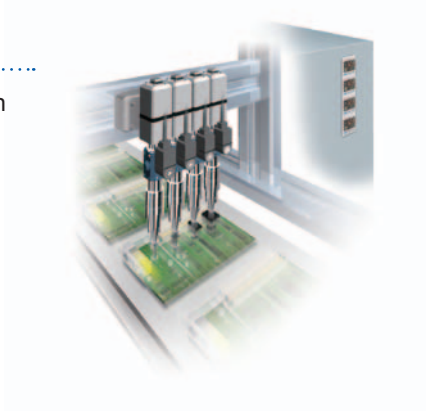

The controller's setting operation mode has a 3-level configuration to suit the frequency of use

The setting levels are clearly separated into "RUN mode" for operation settings that are carried out daily, "MENU SETTING mode" for basic settings, and "PRO mode" for special and detailed setting. These make setting operations easy to understand and easy to carry out.

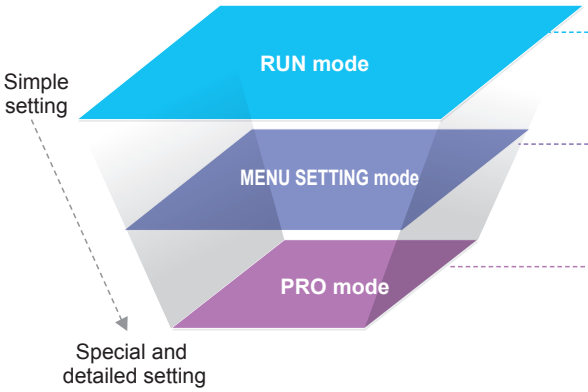

RUN mode

Settings such as threshold value adjustment and key lock operation can be carried out while the sensor is operating.

MENU SETTING mode

Basic settings such as output mode setting and NO / NC switching can be carried out.

PRO mode

High-level function settings such as hysteresis adjustment and the copy function can be carried out.

3-color display lets you view the controller status at a glance

The main display color switches between green and red in accordance with the ON / OFF status of output during RUN mode. In addition, the display always appears orange while setting is in progress, so that the status of the controller can be viewed at a glance.

RUN

RUN mode

Display in red or green depending on output ON / OFF.

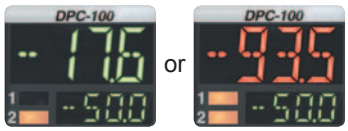

While setting is in progress

MENU SETTING mode

PRO mode

Orange while setting is in progress.

Copy function reduces man-hours and human error

Controllers can be connected to a master controller one by one, and a copy of the setting details for the master controller can be transmitted as data to the slave controllers. If making the same settings for multiple controllers, this prevents setting errors from occurring with the other controllers and also reduces the number of changes required to instruction manuals when equipment designs are changed.

Copying via wiring

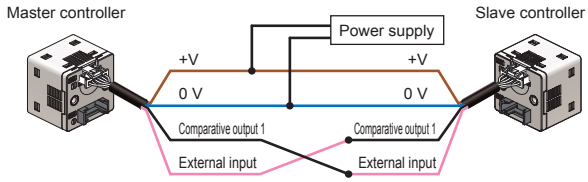

* Other wires are not connected.

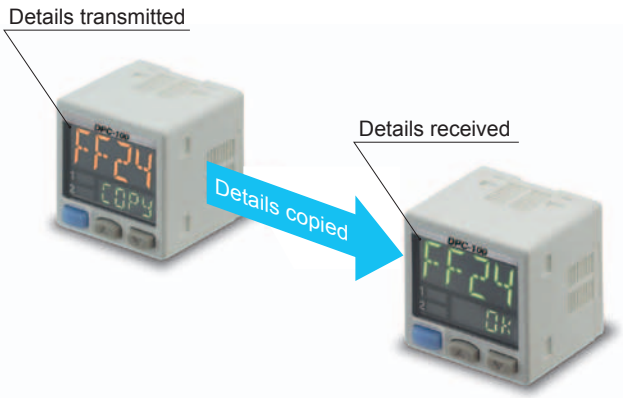

Sensor head auto-recognition

The controller will automatically recognize sensor heads when they are connected, even for sensor heads with different rated pressure ranges. There is no need to use the controller to change settings.

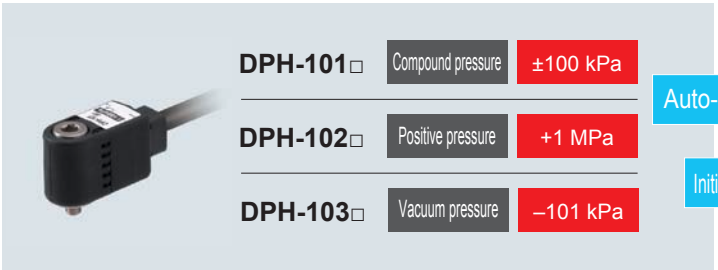

1 model to suit a wide variety of applications

DPC-100 original functions

Equipped with independent two output and three output modes

Equipped with two independent comparative outputs, and separate sensing modes can be selected for each of them. Two comparative outputs are provided, so that one of the outputs can be used as a warning output. In addition, if an output is not being used, it can be disabled.

Vacuum breakdown can also be checked during suction applications!

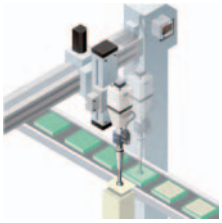

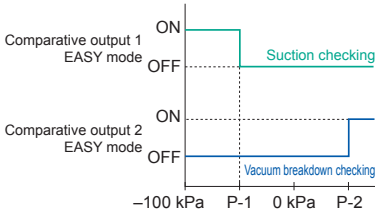

Reference pressure alarm output is possible during reference pressure checking!

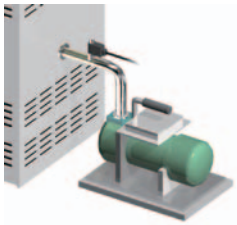

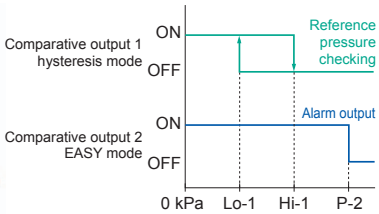

1 EASY mode

This mode is used for comparative output ON / OFF control.

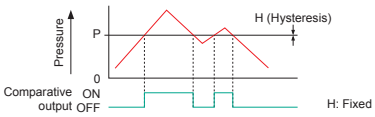

Notes: 1) Hysteresis can be fixed to one of eight different levels.
2) "P-1" appears in the sub display for comparative output 1, and "P-2" appears for comparative output 2.

2 Hysteresis mode

This mode is used for setting comparative output hysteresis to the desired level and for carrying out ON / OFF control.

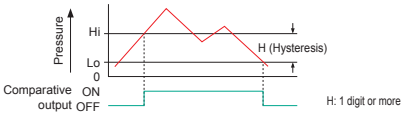

Note: "Hi-1" or "Lo-1" appears in the sub display for comparative output 1, and "Hi-2" or "Lo-2" appears for comparative output 2.

3 Window comparator mode

This mode is used for setting comparative output ON and OFF at pressures within the setting range.

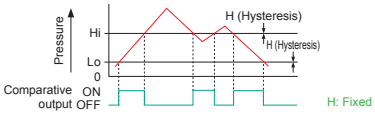

Notes: 1) Hysteresis can be fixed to one of eight different levels.
2) "Hi-1" or "Lo-1" appears in the sub display for comparative output 1, and "Hi-2" or "Lo-2" appears for comparative output 2.

Equipped with auto-reference / remote zero-adjustment functions, More precise pressure management is possible with a minimum of effort

If the reference pressure of the device changes, the auto-reference function partially shift the comparative output judgment level by the amount that the reference pressure shifts, and the remote zero-adjustment function can reset the display value to zero via external input. These functions are ideal for places where the reference pressure fluctuates wildly, or where fine settings are desired.

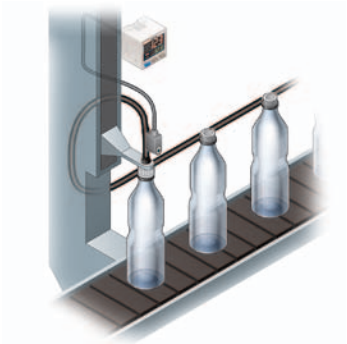

Without auto-reference and remote zero-adjustment functions

Comparative output: Window comparator mode
Hi-1···30, Lo-1···25
Fixed set value

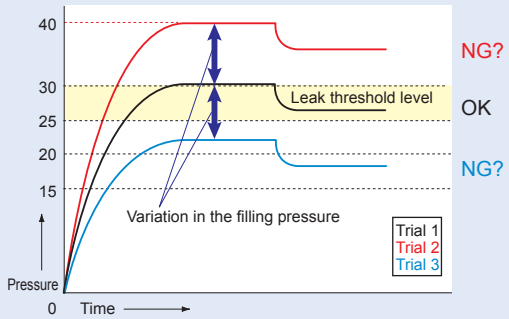

Because the threshold level is fixed for conventional pressure sensors, changes in the reference pressure result in wrong decisions.

With auto-reference function applied

Comparative output: Window comparator mode
Hi-1···0, Lo-1···–5
Sets the absolute threshold level

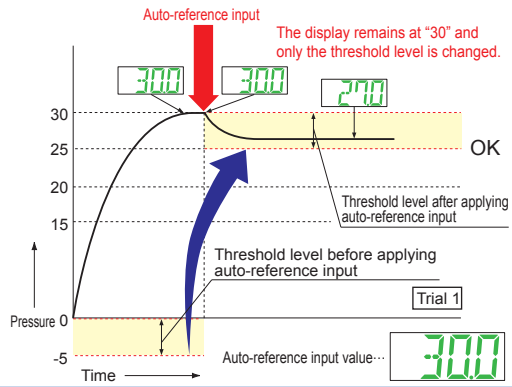

When auto-reference input is applied, the reference pressure "30" is added to the threshold level. If the reference pressure changes to "20" or "40", the auto-reference input compensates for this every time by changing the threshold level, so any variation in the filling pressure can be ignored.

With remote zero-adjustment function applied

Comparative output: Window comparator mode
Hi-1···0, Lo-1···–5
Sets the absolute threshold level

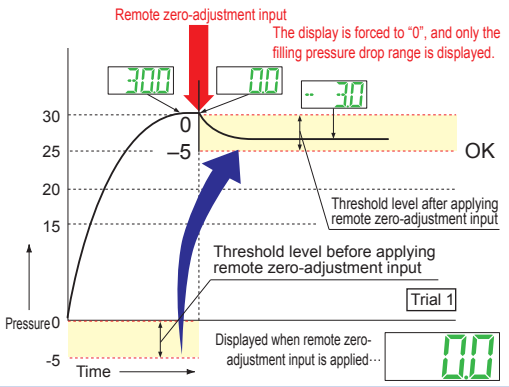

When remote zero-adjustment input is applied, the reference pressure is forced to "0".
If the reference pressure changes to "20" or "40", the remote zero-adjustment input adjusts the reference pressure to "0" every time the reference pressure changes, so any variation in the filling pressure can be ignored.

Sub display can be customized

The sub display can be set to indicate any other desired values or letters apart from the threshold value. This eliminates the need for tasks such as affixing a label to the device to indicate the normal pressure value.

Indicates desired values and letters

<Unit display> <Number display> <Desired letter display>

Setting details can be understood at a glance

The **DPC-100** setting details appear in the digital display. Because the settings are in numeric form that can be easily understood, it is useful for times such as when receiving technical support by telephone.

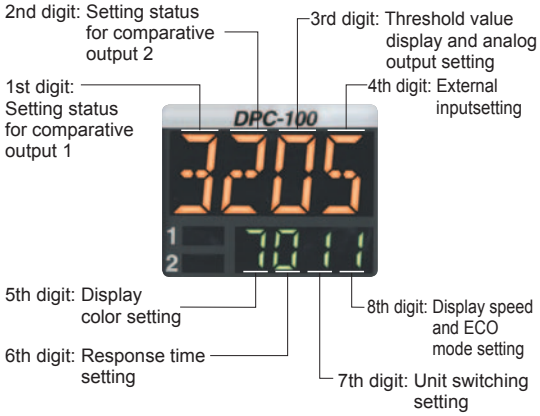

Tight installation to panels is possible

An exclusive mounting bracket (**MS-DP1-2**) that is suitable for 1 to 6 mm 0.039 to 0.236 in panel thickness is available.

Takes up much less space

An exclusive mounting bracket (MS-DP1-6) that supports tight installation is available

Space saving can also be obtained if an L-shaped mounting bracket is used.

Ceiling mounting Floor mounting

Power supply cable can be connected with one-touch connection

The accessory connector attached cable (2 m 6.562 ft) can be connected easily with one-touch connection.

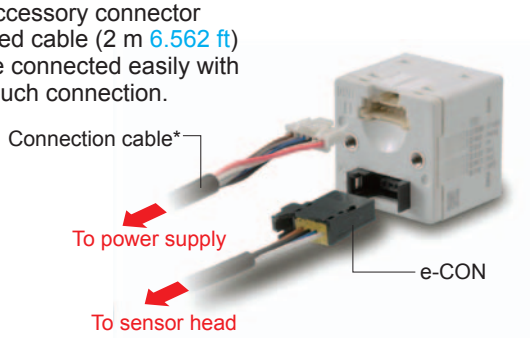

* Options: 5 m 16.404 ft type is also available.

Types without connector attached cable are also available

DPC-10□-J

Commercially-available connectors can be used for cable connections. Only the required length of cable needs to be used, which contributes to a reduced amount of wastage for unneeded cable.

Environmentally friendly

PRODUCT CONFIGURATION

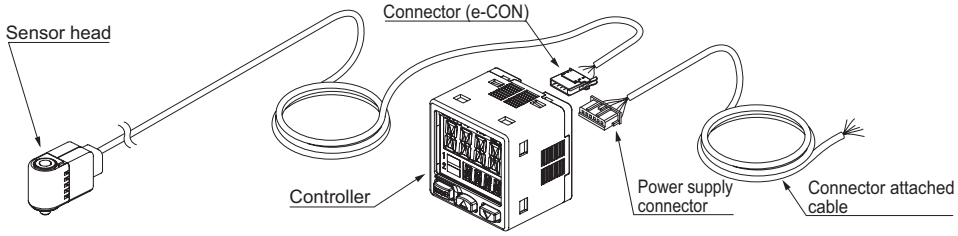

ORDER GUIDE

Sensor heads

Type		Appearance	Rated pressure range	Model No.	Pressure port	Applicable fluid
Compound pressure		DPH-10□-M3(-R) 	–100.0 to +100.0 kPa	**DPH-101**	R1/8 male thread + M5 female thread	Air, non-corrosive gas
				DPH-101-M3	M3 male thread	
				DPH-101-M5	M5 male thread	
	Flexible cable			**DPH-101-R**	R1/8 male thread + M5 female thread	
				DPH-101-M3-R	M3 male thread	
				DPH-101-M5-R	M5 male thread	
Positive pressure		DPH-10□-M5(-R) 	0 to +1.000 MPa	**DPH-102**	R1/8 male thread + M5 female thread	
	Flexible cable			**DPH-102-M5**	M5 male thread	
				DPH-102-M5-R	M5 male thread	
Vacuum pressure		DPH-10□(-R) 	0 to –101.0 kPa	**DPH-103**	R1/8 male thread + M5 female thread	
				DPH-103-M3	M3 male thread	
				DPH-103-M5	M5 male thread	
	Flexible cable			**DPH-103-R**	R1/8 male thread + M5 female thread	
				DPH-103-M3-R	M3 male thread	
				DPH-103-M5-R	M5 male thread	

5 m 16.404 ft cable length type

5 m 16.404 ft cable length type (standard: 2 m 6.562 ft) is also available. When ordering this type, suffix"**-C5**" to the Model No.
(e.g.) 5 m 16.404 ft cable length type of **DPH-103-M5-R** is "**DPH-103-M5-R-C5**"

Controllers

Appearance	Rated pressure range	Model No.	Comparative output
 * **CN-66A-C2** (Connector attached cable 2 m 6.562 ft) is attached.	Compound pressure: –100.0 to +100.0 kPa Positive pressure: 0 to +1.000 MPa Vacuum pressure: 0 to –101.0 kPa	**DPC-101**	NPN open-collector transistor
		DPC-101-P	PNP open-collector transistor

Type without connector attached cable

Type without connector attached cable **CN-66A-C2** is available. When ordering this type, suffix "**-J**" to the Model No.
(e.g) Type without connector attached cable of **DPC-101-P** is "**DPC-101-P-J**"

Accessory

• **CN-66A-C2** (Connector attached cable 2 m 6.562 ft)

OPTIONS

Designation	Model No.	Description	
Sensor head connector (e-CON)	**CN-EP2** (Note 1) 5 pcs. per set	Connector for connecting sensor head controller	
Connector attached cable	**CN-66A-C2** (Note 2)	Length 2 m 6.562 ft	Controller power supply / I-O cable. 0.2 mm² 6-core oil-resistant cabtyre cable with connector
	CN-66A-C5	Length 5 m 16.404 ft	
Power supply connector	**CN-66A** 5 pcs. per set	Connector for controller power supply / I-O cable.	
Controller mounting bracket	**MS-DP1-6**	Allows sensors to be installed on the wall. Multiple sensors can also be mounted closely.	
Panel mounting bracket	**MS-DP1-2**	Allows installation to panels with thickness of 1 to 6 mm 0.039 to 0.236 in. Multiple sensors can also be mounted closely.	
Front protection cover	**MS-DP1-3**	Protects the adjustment surfaces of controllers. (Can be attached when using the panel mounting bracket)	

Notes: 1) One is attached to each sensor head according to standard.
2) The connector attached cable **CN-66A-C2** is supplied with the controller according to standard.

Sensor head connector (e-CON)

- **CN-EP2**

Note: One is attached to each sensor head according to standard.

Connector attached cable

- **CN-66A-C2**
- **CN-66A-C5**

Note: The connector attached cable **CN-66A-C2** is supplied with the controller according to standard.

Power supply connector

- **CN-66A**

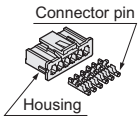

Controller mounting bracket

- **MS-DP1-6**

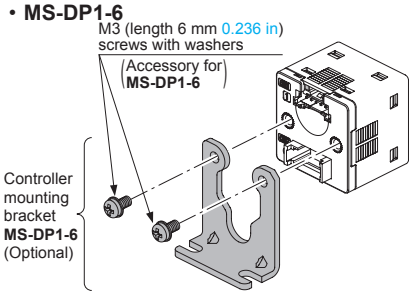

Panel mounting bracket, Front protection cover

- **MS-DP1-2**
- **MS-DP1-3**

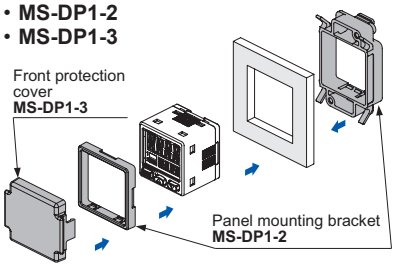

Recommended e-CON

Model No.: 1473562-4 (Manufactured by Tyco Electronics Japan G.K.)
Note: Contact the manufacturer for details of the recommended products.

Recommended power supply connector

Contact: SPHD-001T-P0.5, Housing: PAP-06V-S (Manufactured by J.S.T. Mfg.Co., Ltd.)
Note: Contact the manufacturer for details of the recommended products.

Recommended crimping tool

Model No.: YC-610R (Manufactured by J.S.T. Mfg. Co., Ltd.)
Note: Contact the manufacturer for details of the recommended products.

SPECIFICATIONS

Sensor heads

Item \ Type		Compound pressure			Positive pressure		Vacuum pressure		
		±100 kPa type			1 MPa type		–101 kPa type		
	Model No.(Note 3)	**DPH-101**(-R)	DPH-101-M3(-R)	DPH-101-M5(-R)	**DPH-102**	DPH-102-M5(-R)	**DPH-103**(-R)	DPH-103-M3(-R)	DPH-103-M5(-R)
Type of pressure		Gauge pressure							
Rated pressure range		–100.0 to +100.0 kPa			0 to +1.000 MPa		0 to –101.0 kPa		
Pressure withstandability		500 kPa			1.5 MPa		500 kPa		
Applicable fluid		Air, non-corrosive gas							
Supply voltage		12 to 24 V DC ±10 % Ripple P-P 10 % or less							
Current consumption		15 mA or less							
Analog voltage output		Output voltage: 1 to 5 V (over rated pressure range) Zero point: within 1 V ±2.5 % F.S. (vacuum / positive pressure type) within 3 V ±3 % F.S. (compound pressure type) Span: within 4 V ±3.5 % F.S. Linearity: within ±0.5 % F.S. Output impedance: 1 kΩ approx. 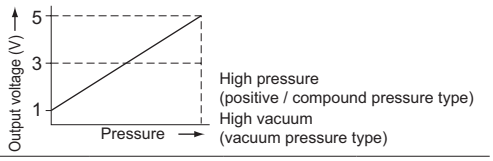							
Environmental resistance	Protection	IP40 (IEC)							
	Ambient temperature	0 to +50 °C +32 to +122 °F (No dew condensation allowed), Storage: –10 to +60 °C +14 to +140 °F							
	Ambient humidity	35 to 85 % RH, Storage: 35 to 85 % RH							
	Voltage withstandability	1,000 V AC for one min. between all supply terminals connected together and enclosure							
	Insulation resistance	50 MΩ, or more, with 500 V DC megger between all supply terminals connected together and enclosure							
	Vibration resistance	10 to 500 Hz frequency, amplitude 3 mm 0.118 in or maximum acceleration 196 m/s^2, in X, Y and Z directions for two hours each							
	Shock resistance	1,000 m/s^2 acceleration (100 G approx.) in X, Y and Z directions for three times each							
Temperature characteristics		Over ambient temperature range 0 to +50 °C +32 to +122 °F: within ±2 % F.S. of detected pressure at +25 °C +77 °F							
Pressure port		**DPH-10□(-R)**: R1/8 male thread + M5 female thread, **DPH-10□-M3(-R)**: M3 male thread (for installing gasket) **DPH-10□-M5(-R)**: M5 male thread (for installing gasket)							
Material		Front case: PBT, Rear case: PBT (glass fiber reinforced), Pressure port: Stainless steel (SUS303), O-ring: NBR Pressure element: Silicon diaphragm, PPS							
Connecting method		Connector							
Cable		0.2 mm^2 4-core oil resistant cabtyre cable (Models with "**-R**" affixed to the Model No. have flexible, oil-resistant cabtyre cable)							
Cable extension		Extension up to total 10 m 32.808 ft is possible with 0.2 mm^2, or more, cable.							
Weight	Net weight	**DPH-10□(-R)**: Head 10 g approx. / Cable 40 g approx., **DPH-10□-M3/M5(-R)**: Head 6 g approx. / Cable 40 g approx.							
	Gross weight	**DPH-10□(-R)**: 80 g approx., **DPH-10□-M3/M5(-R)**: 70 g approx.							
Accessory		Connector (e-CON): 1 pc.							

Notes: 1) Where measurement conditions have not been specified precisely, the conditions used were an ambient temperature of +25 °C +77 °F.
2) The sensor head can be used independently.
3) Model No. having the suffix "**-R**" is flexible cable type.

SPECIFICATIONS

Controllers

Item / Type	NPN output type	PNP output type
Model No.	**DPC-101**	**DPC-101-P**
Applicable sensor head	**DPH-101□, DPH-102□, DPH-103□**	
Rated pressure range (Note 2)	Compound pressure: –100.0 to +100.0 kPa, Positive pressure: 0 to +1.000 MPa, Vacuum pressure: 0 to –101.0 kPa	
Set pressure range (Note 2)	Compound pressure: –199.9 to +199.9 kPa (–1.999 to +1.999 kgf/cm^2, –19.98 to +19.98 psi, –1.999 to +1.999 bar, –1510 to +1537 mmHg, –59.4 to +60.5 inHg) Positive pressure: –1.050 to +1.050 MPa (–10.71 to +10.71 kgf/cm^2, –152.2 to +152.2 psi, –10.50 to +10.50 bar) Vacuum pressure: +101.3 to –101.3 kPa (+1.033 to –1.033 kgf/cm^2, +14.70 to –14.70 psi, +1.013 to –1.013 bar, +760 to –760 mmHg, +29.9 to –29.9 inHg)	
Supply voltage	12 to 24 V DC ±10 % Ripple P-P 10 % or less	
Power consumption	Normal operation: 960 mW or less (Current consumption 40 mA or less at 24 V supply voltage) ECO mode (STD): 720 mW or less (Current consumption 30 mA or less at 24 V supply voltage) ECO mode (FULL): 600 mW or less (Current consumption 25 mA or less at 24 V supply voltage) Excluding the current consumption of sensor head and analog output current	
Sensor head supply voltage	Same as supply voltage	
Comparative outputs (Comparative output 1, 2)	NPN open-collector transistor (2 outputs) • Maximum sink current: 100 mA • Applied voltage: 30 V DC or less (between comparative output and 0 V) • Residual voltage: 2 V or less (at 100 mA sink current)	PNP open-collector transistor (2 outputs) • Maximum source current: 100 mA • Applied voltage: 30 V DC or less (between comparative output and +V) • Residual voltage: 2 V or less (at 100 mA source current)
Output operation	NO / NC, selectable by key operation	
Output modes	EASY mode / Hysteresis mode / Window comparator mode	
Hysteresis	Minimum 1 digit (variable) (however, 2 digits when using psi unit)	
Repeatability	With vacuum / positive pressure type connected: within ±0.2 % F.S. (±2 digits) With compound pressure type connected: within ±0.2 % F.S. (±4 digits)	
Response time	0.5 ms, 1 ms, 2.5 ms, 5 ms, 10 ms, 25 ms, 50 ms, 100 ms, 250 ms, 500 ms, 1,000 ms, 5,000 ms, selectable by key operation	
Short-circuit protection	Incorporated	
Analog output	<Analog voltage output> • Output current: 1 to 5 V DC • Zero point: within 1 V ±0.5 % F.S. (vacuum / positive pressure type) within 3 V ±0.5 % F.S. (compound pressure type) • Span: within 4 V ±0.5 % F.S. • Linearity: within ±0.1 % F.S. • Output impedance: 1 kΩ approx.	<Analog current output> • Output current: 4 to 20 mA • Zero point: within 4 mA ±1 % F.S. (vacuum / positive pressure type) within 12 mA ±1.5 % F.S. (compound pressure type) • Span: within 16 mA ±1.5 % F.S. • Linearity: within ±0.1 % F.S. • Load resistance: 250 Ω (max.)
Inputs: Sensor head input	Input voltage range: 1 to 5 V DC (over rated pressure range)	
Inputs: External input (Auto-reference function/ Remote zero-adjustment function)	ON voltage: 0.4 V DC or less OFF voltage: 5 to 30 V DC, or open Input impedance: 10 kΩ approx. Input time: 1 ms or more	ON voltage: 5 V to +V DC OFF voltage: 0.6 V DC or less, or open Input impedance: 10 kΩ approx. Input time: 1 ms or more
Display	4 digits + 4 digits 3-color LCD display (Display refresh rate: 250 ms, 500 ms, 1,000 ms, selectable by key operation)	
Displayable pressure range	Vacuum pressure: +5.1 to –101.3 kPa, Positive pressure: –0.050 to +1.020 MPa, Compound pressure: –101.3 to +105.0 kPa	
Operation indicator	Orange LED (Comparative output 1 operation indicator, comparative output 2 operation indicator: Lights up when each comparative output is ON)	
Environmental resistance: Protection	IP40 (IEC)	
Environmental resistance: Ambient temperature	–10 to +50 °C +14 to +122 °F (No dew condensation or icing allowed), Storage: –10 to +60 °C +14 to +140 °F	
Environmental resistance: Ambient humidity	35 to 85 % RH, Storage: 35 to 85 % RH	
Environmental resistance: Voltage withstandability	1,000 V AC for one min. between all supply terminals connected together and enclosure	
Environmental resistance: Insulation resistance	50 MΩ, or more, with 500 V DC megger between all supply terminals connected together and enclosure	
Environmental resistance: Vibration resistance	10 to 500 Hz frequency, amplitude 3 mm 0.118 in or maximum acceleration 196 m/s^2, in X, Y and Z directions for two hours each (when panel mounting bracket is mounted : 10 to 150 Hz frequency, amplitude 0.75 mm 0.030 in or maximum acceleration 49 m/s^2, in X, Y and Z directions for two hours each)	
Environmental resistance: Shock resistance	100 m/s^2 acceleration (10 G approx.) in X, Y and Z directions for three times each	
Temperature characteristics	Within ±0.5 % F.S. (ambient temperature range based on +20 °C +68 °F)	
Material	Enclosure: PBT (glass fiber reinforced), LCD display: Acrylic, Mounting threaded part: Brass (nickel plated), Switch part: Silicone rubber	
Connecting method	Connector	
Cable length	Total length up to 100 m 328.084 ft is possible with 0.3 mm^2, or more, cable.	
Weight	Net weight: 25 g approx. (excluding connector attached cable), Gross weight: 140 g approx.	
Accessories	**CN-66A-C2** (Connector attached cable 2 m 6.562 ft), Pressure unit label: 1 set	

Notes: 1) Where measurement conditions have not been specified precisely, the conditions used were an ambient temperature of +20 °C +68 °F.
2) It changes automatically according to the connected pressure sensor head.
3) The values specified above are applied only to the controller.

I/O CIRCUIT AND WIRING DIAGRAMS

DPC-101

NPN output type

I/O circuit diagram

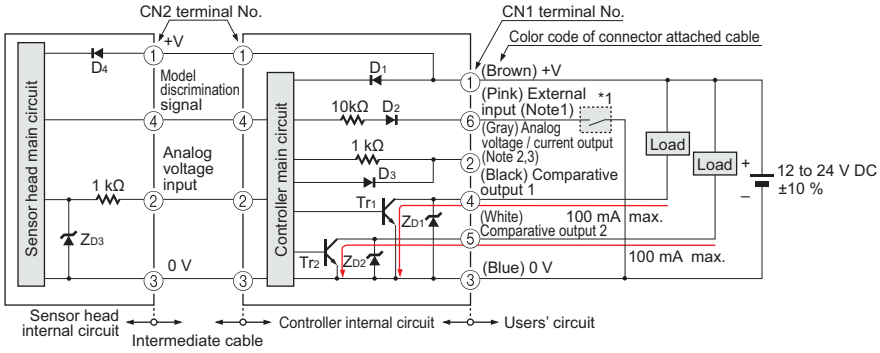

Notes: 1) Select and use the auto-reference function and remote zero-adjustment function.
2) Set the output load resistance during analog current output to 250 Ω (max.)
3) Note that a voltage of 5 V or higher is generated during analog current output.

Symbols … D_1 to D_4 : Reverse supply polarity protection diode
Z_{D1} to Z_{D3} : Surge absorption zener diode
Tr_1, Tr_2 : NPN output transistor

*1

Non-voltage contact or NPN open-collector transistor

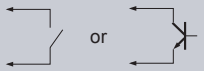

High (5 to 30 V DC, or open): Invalid
Low (0.4 V DC or less): Valid

For independent use of sensor head

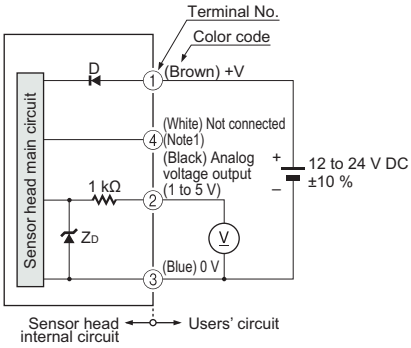

Notes: 1) In case the sensor head is used independently, insulate the white lead wire (terminal No.4) and keep it open.
2) When the sensor head is used independently, devices connected to the analog output must have an input impedance set at 50 kΩ or more.

Symbols … D : Reverse supply polarity protection diode
Z_D: Surge absorption zener diode

Terminal arrangement diagram

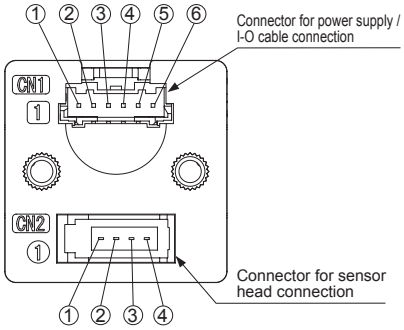

Connector for power supply / I-O cable (CN1)

① +V
② Analog voltage / current output
③ 0 V
④ Comparative output 1
⑤ Comparative output 2
⑥ External input (auto-reference function / remote zero-adjustment function)

Connector for sensor head (CN2)

① Sensor head supply voltage
② Analog voltage input
③ 0 V
④ Model discrimination signal

I/O CIRCUIT AND WIRING DIAGRAMS

DPC-101-P

PNP output type

I/O circuit diagram

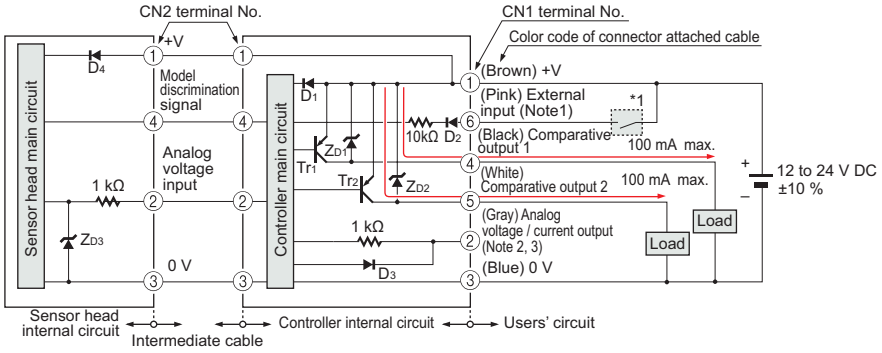

Notes: 1) Select and use the auto-reference function and remote zero-adjustment function.
2) Set the output load resistance during analog current output to 250 Ω (max.)
3) Note that a voltage of +5 V or higher is generated during analog current output.

Symbols … D_1 to D_4 : Reverse supply polarity protection diode
Z_{D1} to Z_{D3} : Surge absorption zener diode
Tr_1, Tr_2 : PNP output transistor

*1

Non-voltage contact or PNP open-collector transistor

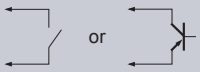

High (5 to +V DC): Valid
Low (0.6 V DC or less, or open): Invalid

For independent use of sensor head

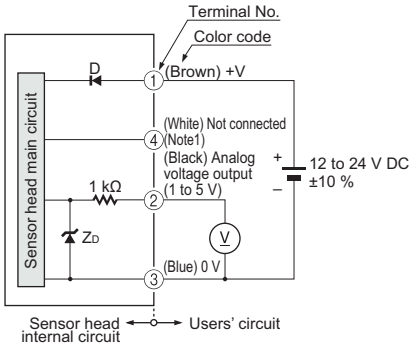

Notes: 1) In case the sensor head is used independently, insulate the white lead wire (terminal No.4) and keep it open.
2) When the sensor head is used independently, devices connected to the analog output must have an input impedance set at 50 kΩ or more.

Symbols … D : Reverse supply polarity protection diode
Z_D: Surge absorption zener diode

Terminal arrangement diagram

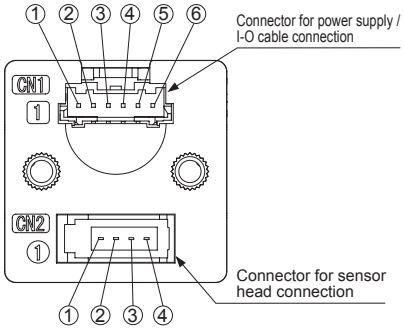

Connector for power supply / I-O cable (CN1)

① +V
② Analog voltage / current output
③ 0 V
④ Comparative output 1
⑤ Comparative output 2
⑥ External input (auto-reference function / remote zero-adjustment function)

Connector for sensor head (CN2)

① Sensor head supply voltage
② Analog voltage input
③ 0 V
④ Model discrimination signal

PRECAUTIONS FOR PROPER USE

Refer to p.1472 for general precautions.

- Never use this product as a sensing device for personnel protection.
- In case of using sensing devices for personnel protection, use products which meet laws and standards, such as OSHA, ANSI or IEC etc., for personnel protection applicable in each region or country.
- The **DPH-100** series is designed for use with air and non-corrosive gas. It cannot be used with liquid or corrosive and inflammable gases.

Part description

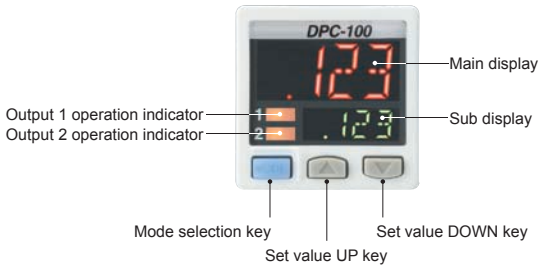

Wiring

- Make sure that the power supply is off while wiring.
- Verify that the supply voltage variation is within the rating.
- If power is supplied from a commercial switching regulator, ensure that the frame ground (F.G.) terminal of the power supply is connected to an actual ground.
- In case noise generating equipment (switching regulator, inverter motor, etc.) is used in the vicinity of this sensor, connect the frame ground (F.G.) terminal of the equipment to an actual ground.
- Do not run the wires together with high-voltage lines or power lines or put them in the same raceway. This can cause malfunction due to induction.
- Incorrect wiring will cause problems with operation.

Connection

- Do not apply stress directly to the connection cable leader or to the connector.

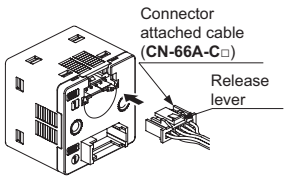

<Connector of connector attached cable>
Housing: PAP-06V-S
[Manufactured by J.S.T Mfg. Co. Ltd.]

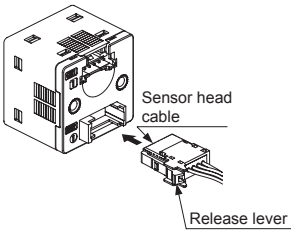

<Connector of sensor head cable>
e-CON: 1473562-4
[Manufactured by Tyco Electronics Japan G.K.]

Mounting

- When tightening the controller to the controller mounting bracket **MS-DP1-6** (optional), use a tightening torque of 0.5 N·m or less.

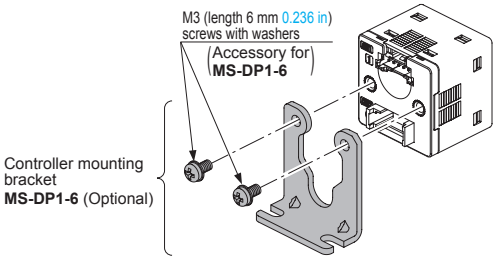

- The **MS-DP1-2** panel mounting bracket (optional) and the **MS-DP1-3** front protection cover (optional) are also available.

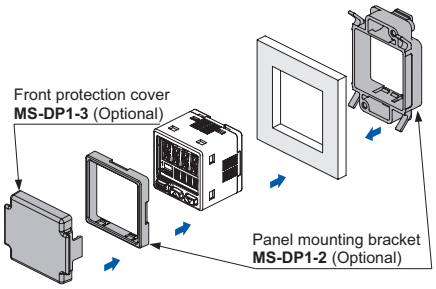

Piping

- Use a hexagonal wrench to install sensor head. For the tightening torque, refer to the following diagram. If excessive tightening torque is applied, the pressure port of the sensor head or the M5 male screw of the commercial coupling will get damaged. In case of R1/8 male thread type, wrap sealing tape around the coupler when connecting to prevent leakage.

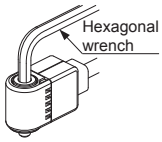

Pressure port	Hexagonal wrench (bolt width)	Tightening torque
R1/8 male thread	5 mm 0.197 in	9.8 N·m or less
M3 male thread	3 mm 0.118 in	0.8 N·m or less
M5 male thread		1.5 N·m or less

Others

- Use within the rated pressure range.
- Do not apply pressure exceeding the pressure withstandability value. The diaphragm will get damaged and correct operation shall not be maintained.
- Do not use during the initial transient time (controller: 0.5 sec. approx, sensor head: 50 ms approx.) after the power supply is switched on.
- Avoid dust, dirt, and steam.
- Take care that the sensor does not come in direct contact with water, oil, grease, or organic solvents, such as, thinner, etc.
- Do not insert wires, etc., into the pressure port. The diaphragm will get damaged and correct operation shall not be maintained.
- Do not operate the keys with pointed or sharp objects.

PRECAUTIONS FOR PROPER USE

Refer to p.1472 for general precautions.

RUN mode

- This is the normal operating mode.

Setting item	Description
Threshold value setting	The threshold values for ON / OFF operation can be changed directly by pressing the increment key (UP) and the decrement key (DOWN).
Zero-adjustment function	This forces the pressure value display to be reset to zero when the pressure port is open on the atmospheric pressure side.
Key lock function	Stops key operations from being accepted.
Peak hold / bottom hold function	Displays the peak value and bottom value for fluctuating pressure. The peak value appears in the main display, and the bottom value appears in the sub display.

MENU SETTING mode

- If the mode selection key is pressed and held for 2 sec. in RUN mode, the mode will switch to MENU SETTING mode.
- If the mode selection key is pressed while a setting is being made, the mode will switch to RUN mode. In this case, the settings that have been changed will be entered.

Setting item	Description
Comparative output 1 output mode setting	Sets the output mode for comparative output 1.
Comparative output 2 output mode setting	Sets the output mode for comparative output 2.
Analog voltage / current output selection	Selects analog voltage output or analog current output.
External input selection	Selects auto-reference function, or remote zero-adjustment function.
NO / NC selection	Normally open (NO) or normally closed (NC) can be selected.
Response time setting	Sets the response time. The response time can be selected from 0.5 ms, 1 ms, 2.5 ms, 5 ms, 10 ms, 25 ms, 50 ms, 100 ms, 250 ms, 500 ms, 1,000 ms and 5,000 ms.
Display color switching for main display	Allows the color for the main display to be changed. The colors can be set to “red / green” or “green / red” to correspond to ON / OFF output, or it can be fixed at “red” or “green” all the time.
Unit switching	Pressure unit can be changed.

PRO mode

- If the mode selection key is pressed and held for 5 sec. in RUN mode, the mode will switch to PRO mode.
- If the mode selection key is pressed while a setting is being made, the mode will switch to RUN mode. In this case, the settings that have been changed will be entered.

Setting item	Description
Sub display switching	Changes the information in the sub display during RUN mode operation to the current pressure unit, number and desired alphanumeric display.
Display refresh rate switching	Changes the display refresh rate for the pressure value displayed in the main display.
Hysteresis fix value switching	Sets the hysteresis for EASY mode and window comparator mode. (8 steps)
Linked display color switching	Allows the display color for the main display to be switched in line with the output operation for comparative output 1 or comparative output 2.
External input relation selection	The setting contents set at the external input selection in MENU SETTING mode can be shifted to correspond to either comparative output 1, 2 or 1 / 2.
ECO mode setting	Allows power consumption to be reduced by dimming the display or turning it off.
Setting check code	Allows the setting details to be checked via codes. (Refer to below)
Setting copy mode	Allows the setting details for the master controller to be copied to slave controllers.
Reset setting	Resets the settings to the factory settings.

Table of codes

Code	1st digit		2nd digit		3rd digit		4th digit	
	Comparative output 1 output mode	NO / NC selection	Comparative output 2 output mode	NO / NC selection	Analog output	Threshold display	External input	
0	EASY	NO	OFF	—	Analog voltage output	Threshold value 1	OFF	—
1		NC	EASY	NO		Threshold value 2	Auto-reference	Comparative output 1
2	Hysteresis	NO		NC		Threshold value 3		Comparative output 2
3		NC	Hysteresis	NO		Threshold value 4		Comparative output 1 / 2
4	Window comparator	NO		NC	Analog current output	Threshold value 1	Remote zero-adjustment	Comparative output 1
5		NC	Window comparator	NO		Threshold value 2		Comparative output 2
6	—	—		NC		Threshold value 3		Comparative output 1 / 2
7	—	—	—	—		Threshold value 4	—	—

Code	5th digit		6th digit	7th digit	8th digit	
	Displayed color of the main display	Displayed color relation	Response time	Unit selection (Note)	Display refresh rate	Eco mode
0	Red when ON	Comparative output 1	0.5 ms	MPa	250 ms	OFF
1		Comparative output 2	1 ms	kPa		STD
2	Green when ON	Comparative output 1	2.5 ms	kgf/cm^2		FULL
3		Comparative output 2	5 ms	bar	500 ms	OFF
4	Always red	Comparative output 1	10 ms	psi		STD
5		Comparative output 2	25 ms	mmHg		FULL
6	Always green	Comparative output 1	50 ms	inHg	1,000 ms	OFF
7		Comparative output 2	100 ms	—		STD
8	—	—	250 ms	—		FULL
9	—	—	500 ms	—	—	—
A	—	—	1,000 ms	—	—	—
B	—	—	5,000 ms	—	—	—

Note: When positive pressure type of the pressure sensor head is connected to the controller for use inside Japan, “0” (MPa) or “1” (kPa) is displayed. When compound pressure type or vacuum pressure type is connected, only “1” (kPa) is displayed.

DIMENSIONS (Unit: mm in)

The CAD data in the dimensions can be downloaded from our website.

DPH-10□(-R) — Sensor head

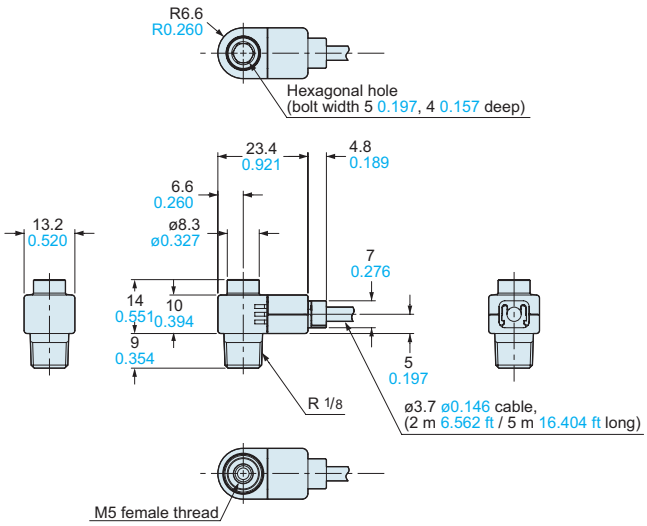

DPH-10□-M3(-R) DPH-10□-M5(-R) — Sensor head

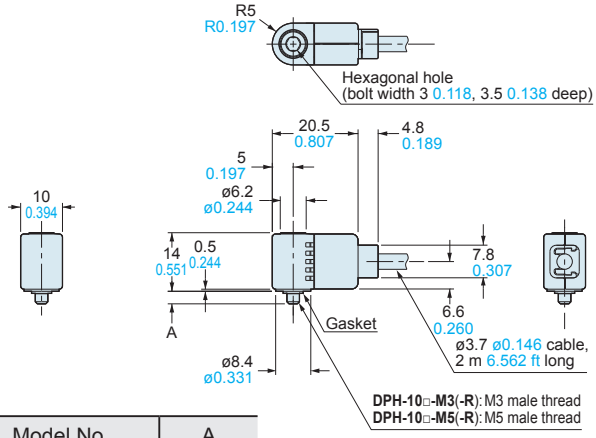

Model No.	A
DPH-10□-M3(-R)	3 0.118
DPH-10□-M5(-R)	3.5 0.138

DPC-101(-P) — Controller

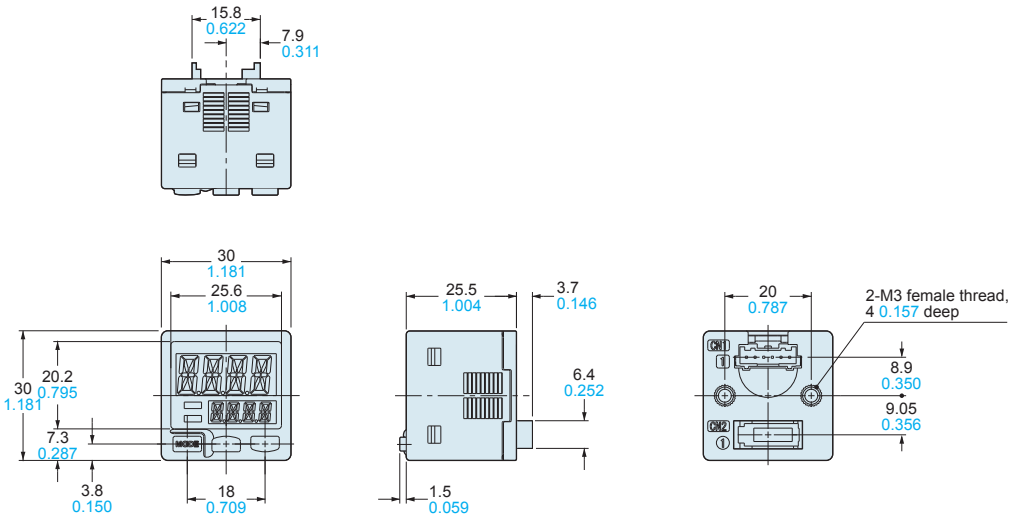

MS-DP1-6 — Controller mounting bracket (Optional)

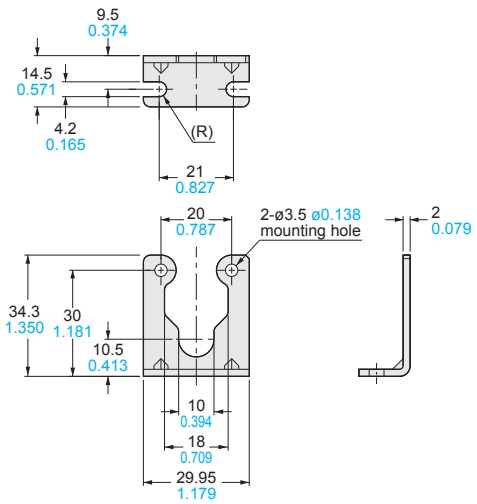

Assembly dimensions

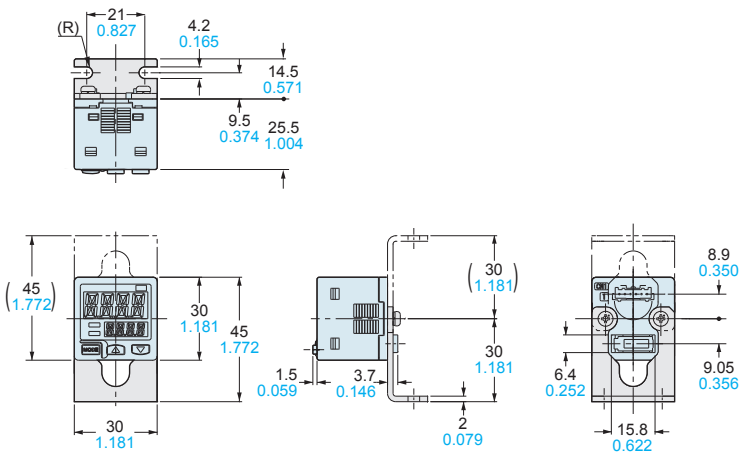

Material : Cold rolled carbon steel (SPCC) (Trivalent uni-chrome plated)
Two M3 (length 6 mm 0.236 in) screws with washers are attached.

DIMENSIONS (Unit: mm in)

The CAD data in the dimensions can be downloaded from our website.

MS-DP1-2 MS-DP1-3

Panel mounting bracket (Optional), Front protection cover (Optional)

Assembly dimensions

Mounting drawing with **DPC-101**

Vertical mounting

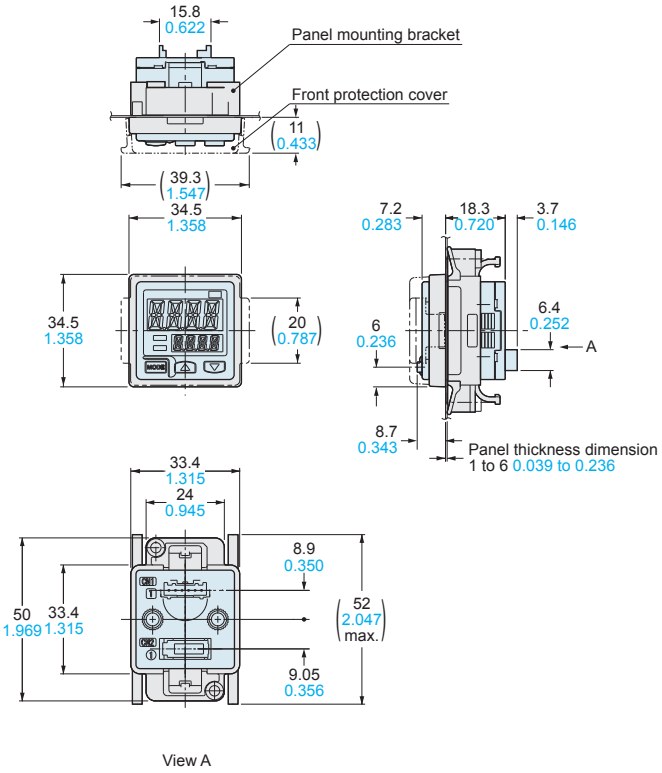

Horizontal mounting

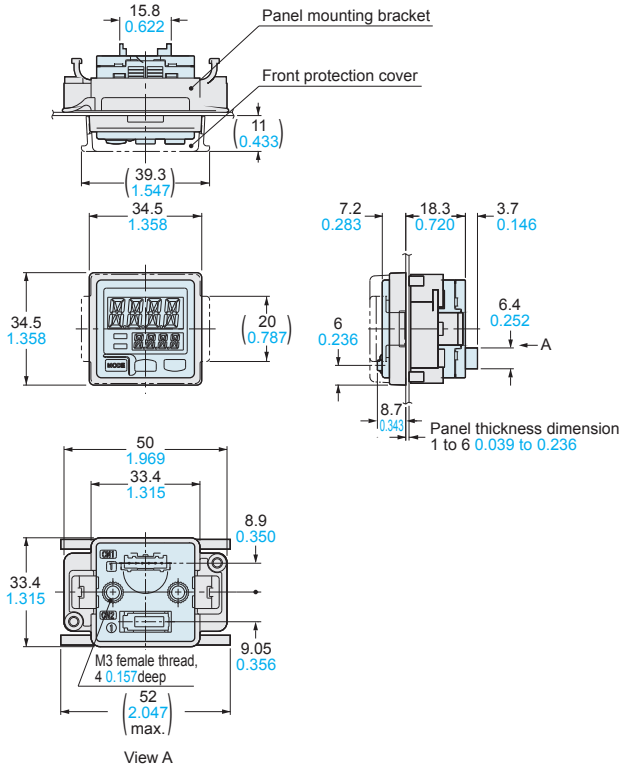

Panel cut-out dimensions

When 1 unit is installed

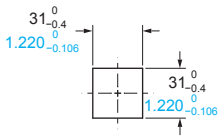

When "n" units are installed horizontally in series

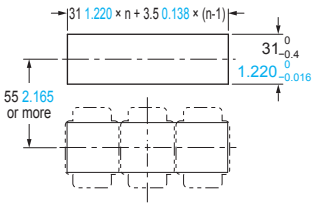

Note: The panel thickness should be 1 to 6 mm 0.039 to 0.236 in.

When "n" units are installed vertically in series

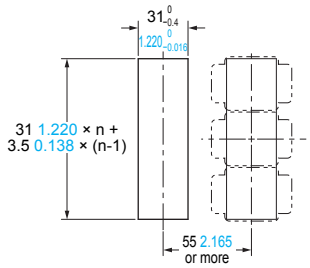

Note: The panel thickness should be 1 to 6 mm 0.039 to 0.236 in.

CN-66A-C2 CN-66A-C5

Connector attached cable (Optional, **CN-66A-C2** is attached to the controller)

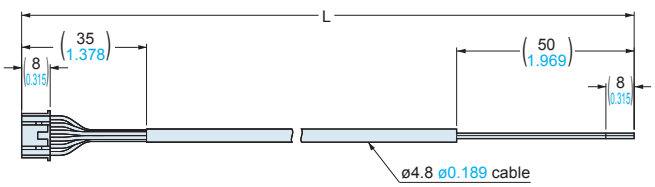

• Length L

Model No.	Length L
CN-66A-C2	2,000 78.740
CN-66A-C5	5,000 196.850